EL-CELL®
electrochemical test equipment

User Manual

Release 1.41

PAT-Press

Single cell package for monitoring the pressure build-up and drawing gas samples using the PAT-Cell-Press

EL-CELL GmbH

Tempowerkring 8

21079 Hamburg - Germany

phone: +49 (0)40 790 12 737

fax: +49 (0)40 790 12 736

e-mail: info@el-cell.com

web: www.el-cell.com

Content

Included component manuals

1 Product description

The PAT-Press is a complete package for recording the pressure rise during battery formation and cycling, and for drawing gas samples from the headspace of the test cell.

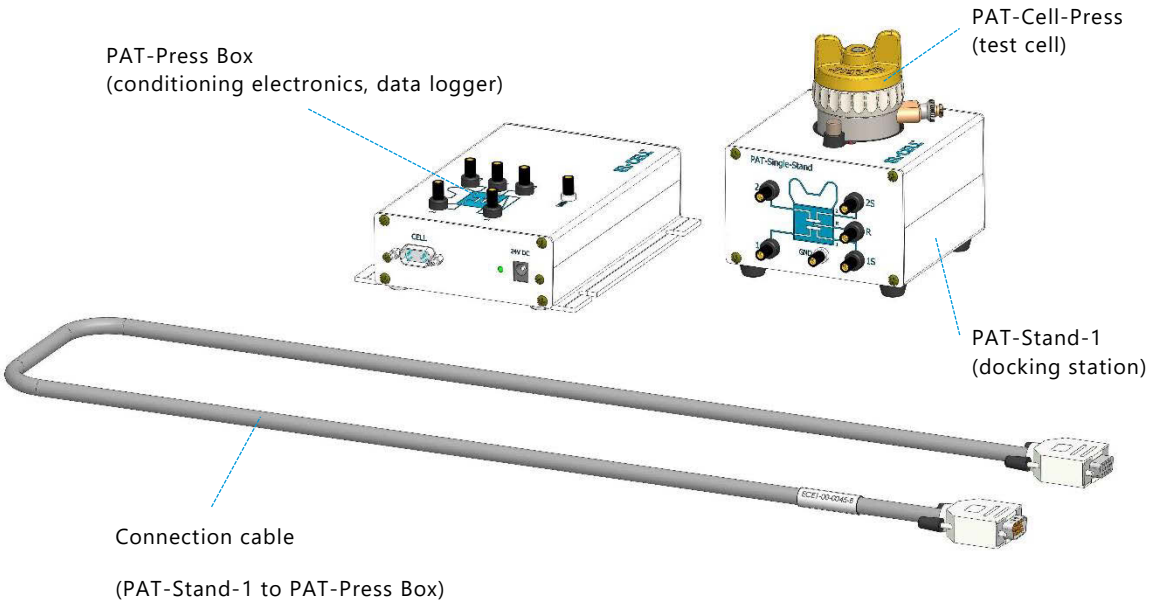

2 Assembly and installation

- Build the PAT-Cell-Press test cell inside a glove box. For details see the manual of the PAT-CELL-Press
- Install the EC-Link datalogger software from the provided CD. For details see the manual of the EC-Link Software.
- Place the PAT-Stand-1 with the inserted test cell inside a temperature chamber (+-0.1°C stability recommended) with cable feed-through.
- With the provided cable, connect the the PAT-Stand-1 inside the chamber to the PAT-Press Box outside the chamber.
- Connect the PAT-Press Box to the provided 24V power supply (wall adapter) and to an USB port at your Windows PC.
- Launch the EC-Link software
- Connect your potentiostat to the PAT-Press Box. For the different connection schemes, please refer to the manual of the PAT-Stand-1.

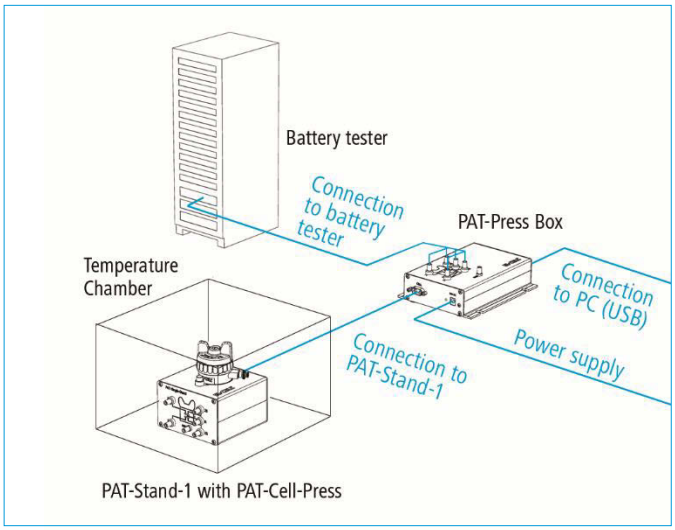

- Prior to starting the electrochemical cycle, we recommend to wait for stabilization of the recorded pressure, typically for at least 24 hours. Initial pressure change may be due to temperature stabilization (typically within the first hour only), equilibration between liquid and gaseous phases and creeping of the polymer seal which is placed between cell base and lid (resulting in volume change).

3 PAT-Press Box

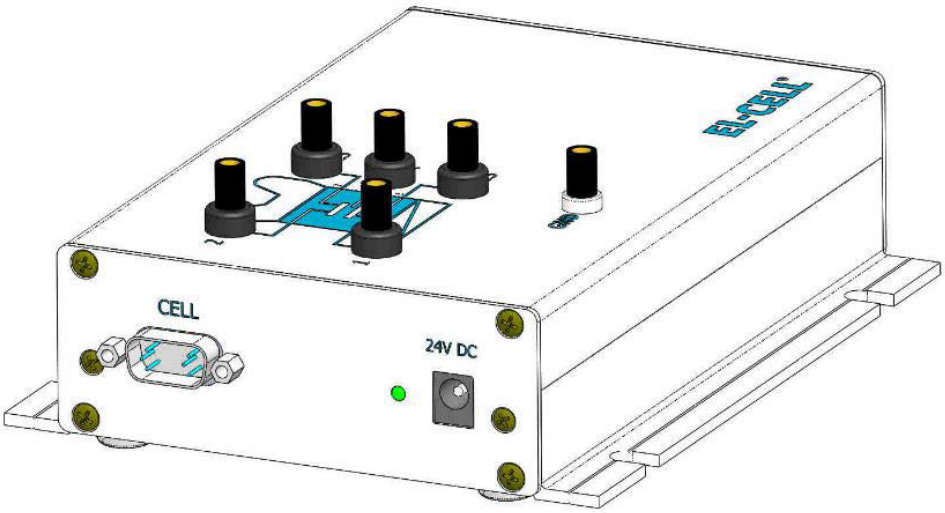

Functions

- Conditioning electronics for the raw signal of the pressure transducer in the PAT-Cell-Press test cell.
- RTD linearization circuit for the Pt100 temperature sensor located in the PAT-Stand-1.
- Instrumentation amplifiers for the test cell signals: cell voltage V12, positive half cell voltage V1R, negative half cell voltage V2R, and cell current I.
- Built-in USB data logger for pressure, temperature, V12, V1R, V2R and I. With the provided EC-Link software the signals can be recorded and displayed on a PC.
- The pressure and temperature signals are also available at the Analog Out connector of the PAT-Press Box. **IF** the used battery tester or potentiostat features auxiliary analog inputs, then it is possible to directly record and display the pressure and temperature with the software application of the battery tester or potentiostat.

Connectors

1. Banana sockets (2 or 4 mm) at the box cover
(Table shows standard connection to potentiostat or battery tester for full cell control)

PAT-Press Box, banana sockets at the box cover	**Potentiostat**	**Battery tester**	**PAT-Core connection**
1	WE Current	Plus Current (B+)	Lower electrode
1S	WE Sense	Plus Sense (S+)	
R	Ce Sense (if available)	Not connected	Reference ring
2S	RE	Minus Sense (S-)	Upper electrode
2	CE	Minus Current (B-)	
GND	GND (if available) of WE	GND (if available) or B+	

2. Analog Out connector (Sub-D M9) at the rear of the box

Pin #	**Signal**	**Comment**
2	Temperature	8 °C/V, 0 V correspond to 0°C
5	Pressure	0.3 bar/V, 0 V correspond to 0 bar abs
9	GND	Signal ground (COM), galvanically isolated from earth (PE)

3. Cell connector (Sub-D M15) at the front of the box

Pin #	Signal	Comments
1	1S	Sense lead to lower electrode of PAT-Core
2	2S	Sense lead to upper electrode
4	R	Sense lead to reference ring
5	2	Current lead to upper electrode
7	VP	Raw signal from pressure transducer inside PAT-Cell-Press test cell
8	+5 V	Power supply of pressure transducer
10	1	Current lead to lower electrode
11	Pt100 (A)	Contact A of Pt100 sensor located inside PAT-Stand-1
12	Pt100 (B)	Contact B of Pt100 sensor located inside PAT-Stand-1
15	GND	Signal ground (COM) of the conditioning electronics, galvanically isolated from earth (PE)

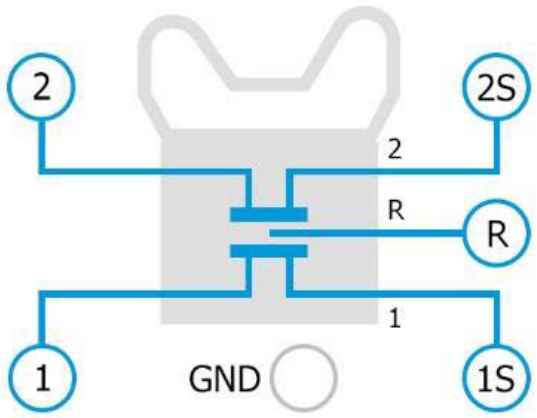

Technical data of the PAT-Press Box

- Dimensions (width x depth x height): 160 mm x 130 mm x 40 mm
- Weight: approx. 0.6 kg
- Operation temperature range: 0 to 40°C
- Humidity: non-condensing
- Power supply: 24 V, 0.6 A supplied by PSA15R-240P mains adapter
- Analog output voltages: -10 to 10 V for pressure and temperature
- USB data logger powered by host PC with galvanic isolation
- Resolution of pressure signal < 0.2 mbar; linearity < 0.5% FS
- Resolution of temperature signal < 0.01 °C; linearity < 0.5% FS

4 Unpacking

Check the contents of the packages against the list given below to verify that you have received all of the required components. Contact EL-CELL, if anything is missing or damaged. **NOTE**: Damaged shipments must remain within the original packaging for freight company inspection.

List of Components

- PAT-Cell-Press
- PAT-Stand-1
- PAT-Press Box ECE1-00-0008-D
- PAT-Stand-1 to PAT-Press box cable ECE1-00-0045-B
- EC-Link Installation –USB ECE1-00-0052-B
- Power supply 15W/24V DC ELT9045
- Power supply adapter ELT9078
- Accessories kit PAT-Press ECC1-00-0315-A
- USB cable typ A/B (2.0 m) ELT9167

5 Accessories

- Press-Box to Biologic Auxiliary Cable, approx. 2 m, ECE1-00-0040-B

Sub-D M9 to Biologic AUX input		
Pin #	**Signal**	**Comment**
6	Analog IN 2	0.. 10 V; 8°C/V
1	Analog IN 1	0.. 10 V; 0.25 bar/V
7	GND	

6 Technical support

Technical support for this product is exclusively provided by EL-CELL GmbH.

EL-CELL GmbH

Tempowerkring 8

21079 Hamburg - Germany

phone: +49 (0)40 790 12 733

fax: +49 (0)40 790 12 736

e-mail: info@el-cell.com

web: www.el-cell.com

7 Warranty

For a period of one year from the date of shipment, EL-CELL GmbH (hereinafter Seller) warrants the goods to be free from defect in material and workmanship to the original purchaser. During the warranty period, Seller agrees to repair or replace defective and/or nonconforming goods or parts without charge for material or labor, or, at the Seller's option, demand return of the goods and tender repayment of the price. Buyer's exclusive remedy is repair or replacement of defective and nonconforming goods, or, at Seller's option, the repayment of the price.

Seller excludes and disclaims any liability for lost profits, personal injury, interruption of service, or for consequential incidental or special damages arising out of, resulting from, or relating in any manner to these goods.

This Limited Warranty does not cover defects, damage, or nonconformity resulting from abuse, misuse, neglect, lack of reasonable care, modification, or the attachment of improper devices to the goods. This Limited Warranty does not cover expendable items. This warranty is void when repairs are performed by a non-authorized person or service center. At Seller's option, repairs or replacements will be made on site or at the factory. If repairs or replacements are to be made at the factory, Buyer shall return the goods prepaid and bear all the risks of loss until delivered to the factory. If Seller returns the goods, they will be delivered prepaid and Seller will bear all risks of loss until delivery to Buyer. Buyer and Seller agree that this Limited Warranty shall be governed by and construed in accordance with the laws of Germany.

The warranties contained in this agreement are in lieu of all other warranties expressed or implied, including the warranties of merchantability and fitness for a particular purpose.

This Limited Warranty supersedes all prior proposals or representations oral or written and constitutes the entire understanding regarding the warranties made by Seller to Buyer. This Limited Warranty may not be expanded or modified except in writing signed by the parties hereto.

EL-CELL®
electrochemical test equipment

User Manual

Release 1.41

PAT-Cell-Press

Electrochemical test cell

EL-CELL GmbH

Tempowerkring 8

21079 Hamburg - Germany

phone: +49 40 79012-737

fax: +49 40 79012-736

e-mail: info@el-cell.com

web: www.el-cell.com

Content

1 Product description

The PAT-Cell-Press is a pressure test cell for measuring gas evolution during the electrochemical cycle. It is a cableless test cell using the PAT-Core concept. As an option, the PAT-Cell-Press is also available with a gas sample port for drawing gas.

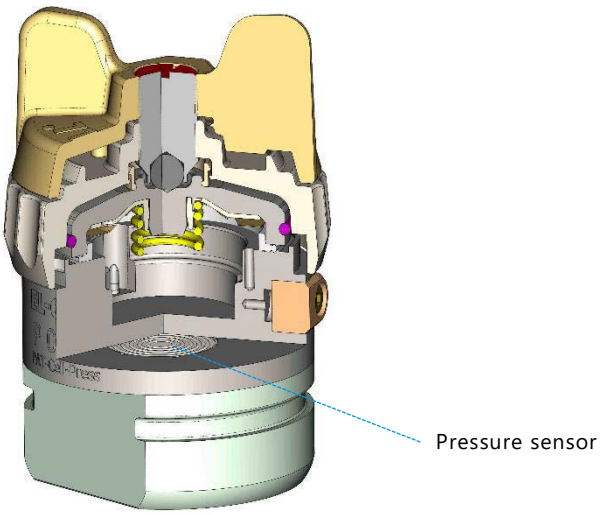

PAT-Cell-Press

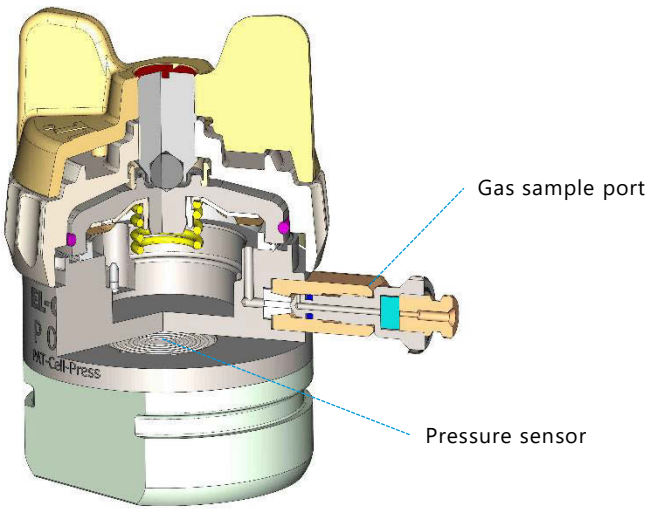

PAT-Cell-Press S

Features and specifications

- PAT-Core design with or without reference electrode
- Laser welded pressure sensor, 0 to 3 bar abs
- Optional gas sample port
- Dead volume with PAT-Core installed: 3.565 cm^3
- Helium leak tested*
- Can be used in single-channel configuration together with the PAT-Stand-1 and the PAT-Press box
- Can be used in multi-channel configuration in the PAT-Chamber-16 and PAT-Tester-i-16

*The PAT-Cell-Press has been tested for leakage at the factory. For an empty cell, pressurized with air through the sample port by means of a syringe, at 2 bar absolute, at 50°C, the pressure decay after 24 hours is guaranteed to be less than 0.3 mbar per hour when using a PE seal, and less than 0.1 mbar per hour when using a PEEK seal.

2 Variants

PAT-Cell-Press

PAT-Cell-Press

Features

- Laser welded pressure sensor, 0 to 3 bar abs

PAT-Cell-Press S

PAT-Cell-Press S

Features

- Laser welded pressure sensor, 0 to 3 bar abs
- Gas sample port

3 Safety precautions

Use proper safety precautions when using hazardous electrode materials and electrolytes. Wear protective glasses and gloves to protect you against electrolyte that may accidentally spill out during disassembly. Upon cell disassembly, dispose all materials properly. Metallic lithium and some insertion compounds may decompose heavily in contact with water and other solvents, and can cause fire.

4 Assembly of the PAT-Cell-Press

This section describes how to assemble the PAT-Cell-Press test cell. A more detailed description of the PAT-Core can be found in a separate manual.

Note: The assembly has to take place under the protective atmosphere in a glove box.

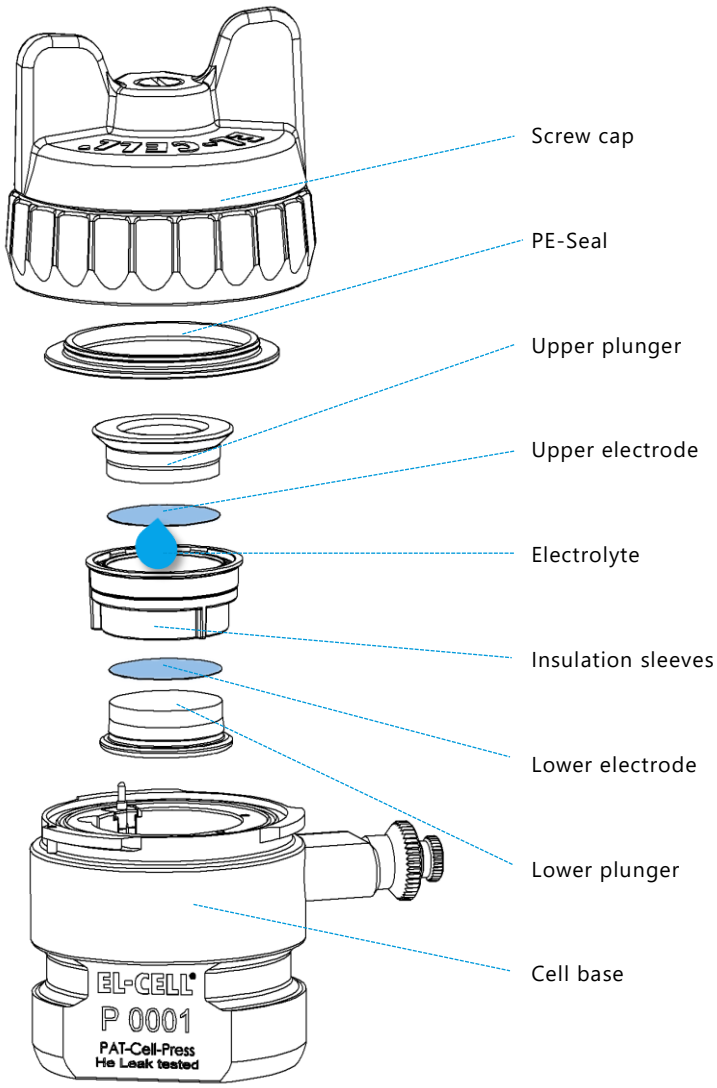

1. Put the **insulation sleeve** onto the worktop with the smaller side pointing upwards. Different insulation sleeves are available for different test purposes, see chapters 6 and 7.

2. Insert the **lower electrode** into the sleeve with the active layer facing downwards.

3. Attach the **lower plunger**. The lower plunger is available in different gap sizes in order to account for the thickness of the electrodes and separator used, see chapters 6 and 7.

4. Turn the assembly upside down.

5. Align the contact spring of the sleeve with the horizontal contact pin inside the **cell base**. Then insert the assembly into the cell base.

6. Evenly dispense approx. 100 µL of **electrolyte** on top of the separator with a pipette. Note: The optimum amount of electrolyte will depend on the thickness and porosity of the separator and the electrodes used.

7. Insert the **upper electrode** into the insulation sleeve with the active layer facing downwards.

8. Attach the **upper plunger**.

9. Attach the **screw cap** to the cell base with the wing nut fully released.

10. Tighten the wing nut clockwise in order to seal the cell

5 Disassembly and cleaning

After disassembly, dispose all single-use PAT-Core components and the electrodes properly. Plungers made of stainless steel have to be cleaned with plenty of water. If necessary, remove persistent dirt from the plungers with aqueous nitric acid (20%, 2 hours at room temperature). The other cell components must not come into contact with nitric acid. Before re-use inside the glove box, completely disassemble the cell and dry the cell parts in vacuum (<0.01 mbar) at 80 °C for at least 12 hours.

The two adjacent holes at the top of the cell base (circeled in the picture below) make connection to the laser welded pressure sensor located inside the lower part of the cell base. **In order to avoid corrosion, no liquids must enter these holes during cell assembly, cell operation and cleaning.**

Holes towards the stainless steel membrane of the laser welded pressure sensor. **Avoid contact with electrolyte or other liquids!**

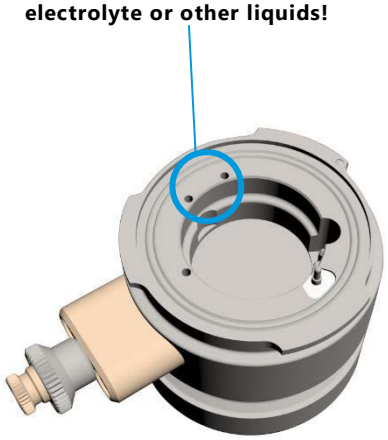

6 Sample valve with septum port (if installed)

The gas sample valve serves to draw gas samples for further characterization from the head space of the test cell.

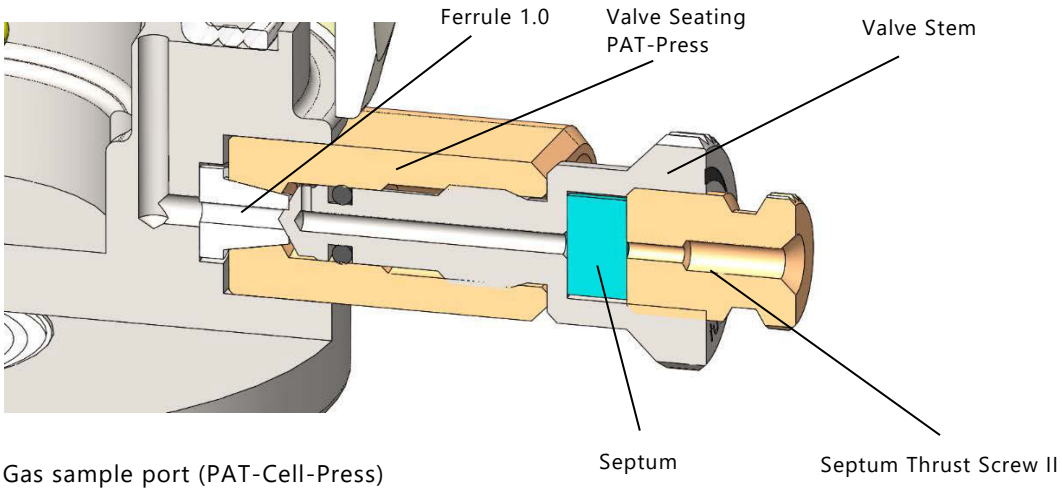

Gas sample port (PAT-Cell-Press)
ECC1-00-0155-C

In the closed state, the valve spindle is seated on the PTFE ferrule and is thus preventing any bleeding through the pierced septum.

6.1 How to draw gas samples

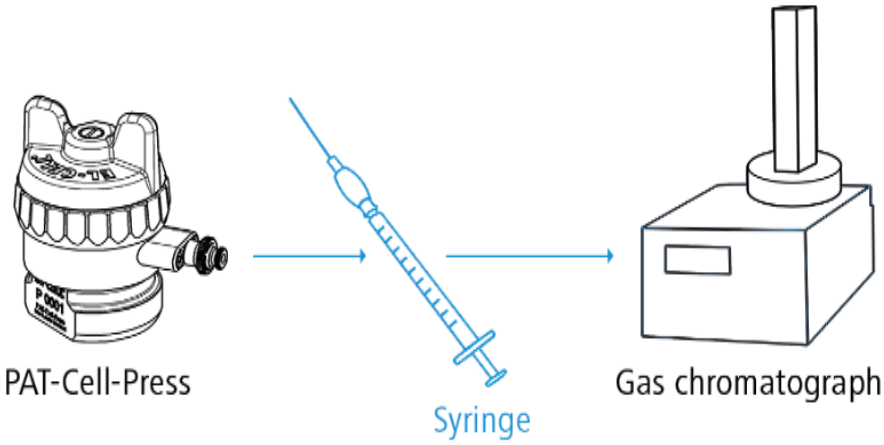

1. Pierce the septum with a sample syringe appropriate for the subsequent gas analysis with e.g. a gas chromatograph. We recommend using a syringe with a pencil-point needle in order to prevent clogging when the septum of the sample port is pierced. A 1 ml syringe (LAB0024) and a pencil-point needle (LAB0039) are provided with the equipment.

2. Open the valve by turning the valve handle counter-clockwise by approx. 90 degrees

3. Fill the syringe by drawing back the syringe piston.

4. Close the valve by turning the valve handle clockwise till finger tight, and remove the syringe.

Note: Do not connect the sample port directly or permanentely to an external device.

7 Unpacking

Check the contents of the packages against the list given below to verify that you have received all of the required components. Contact EL-CELL, if anything is missing or damaged. **NOTE**: Damaged shipments must remain within the original packaging for freight company inspection.

List of components

- PAT-Cell-Press without PAT-Core

  Note: The components of the PAT-Core (insulation sleeves and plungers) must be purchased separately.

Accessories kit for PAT-Cell-Press S

ECC1-00-0315-A

- Septum (10x) ECC1-00-0097-B/X
- Syringe 1ml (w/o Luerlock) LAB0024
- Spinal needle pencil-point (27g) LAB0039
- Sealing ring PEEK (5x) ECC1-00-0232-D
- Ferrule 1.0 ECC1-00-0029-B

Accessories kit for PAT-Cell-Press

ECC1-00-0315-C

- Sealing ring PEEK (5x) ECC1-00-0232-D

8 Technical data

- Diameter: **49.5 mm**
- Height: **73 mm**
- Width: **70 mm / 49.5 mm** (with / without Sample port)
- Electrode diameter: **18 mm**
- Temperature operation range: **-20 to +70°C**
- Dead volume: **3.565ml / 8.144 ml** (with inserted PAT-Core / without PAT-Core)

8.1 Spring force in relation to the thickness of the upper electrode:

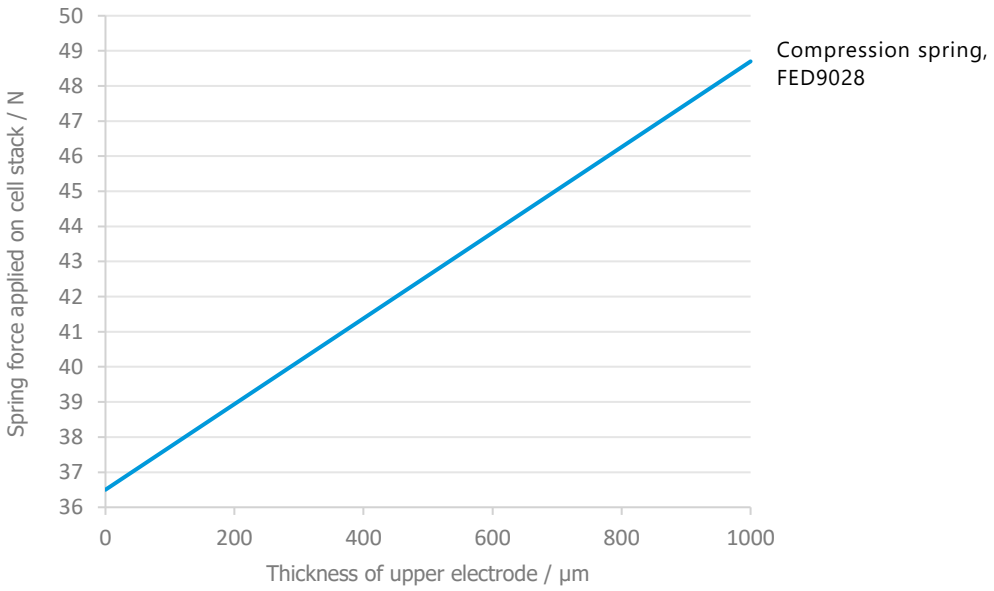

9 Spare parts and consumables

Screw cap (PAT), complete

ECC1-00-0236-B

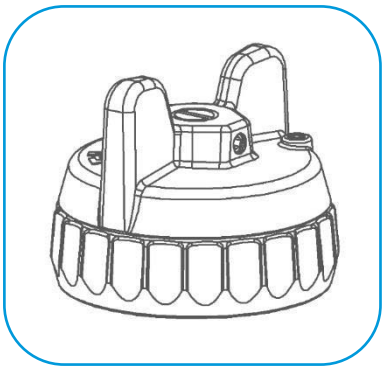

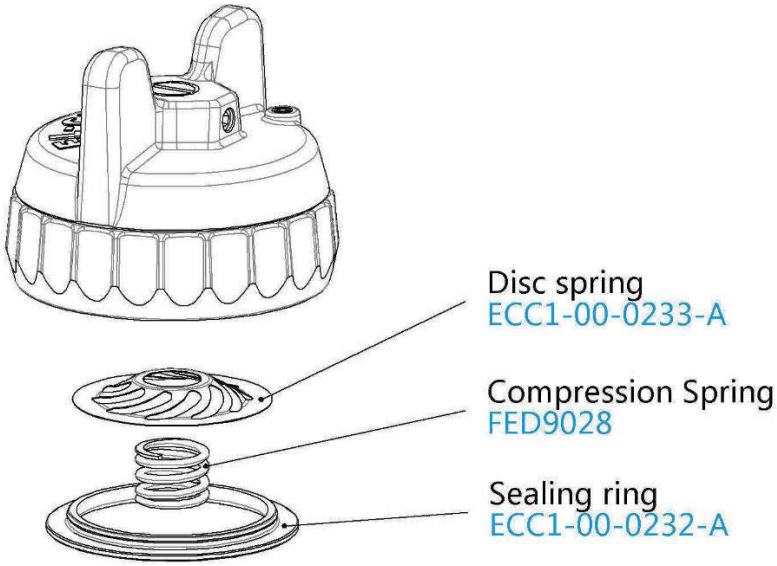

Cell base GTMS (PAT-Press), assy

ECC1-00-0255-A

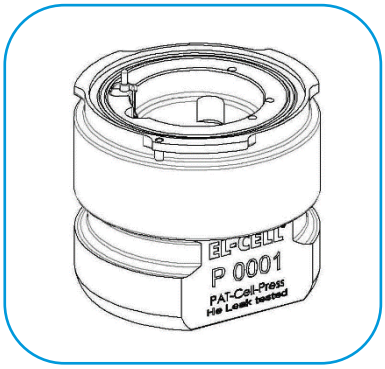

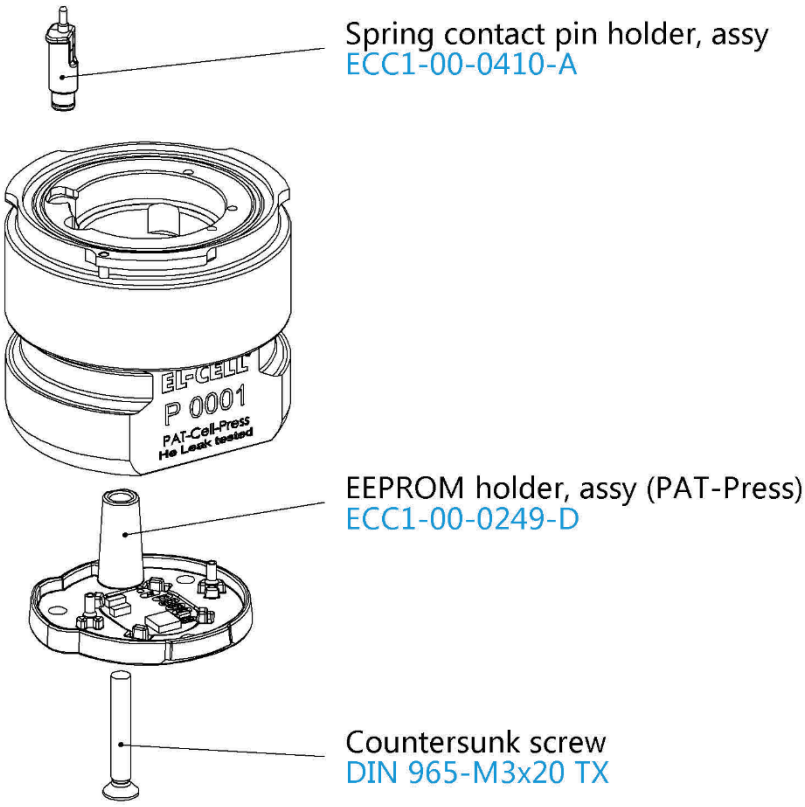

Spring contact pin holder, assy

ECC1-00-0410-A

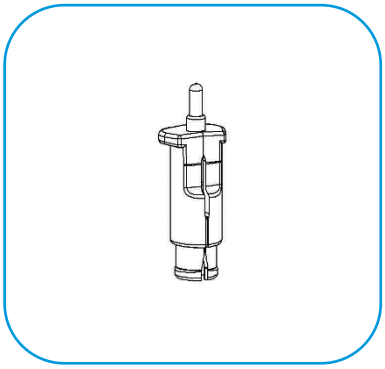

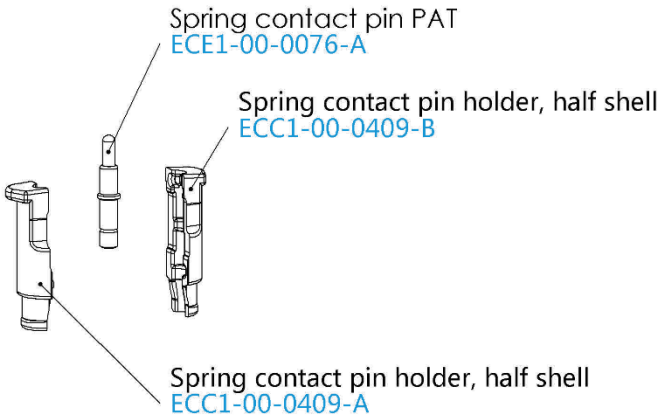

Gas sample port (PAT-Press), assy

ECC1-00-0155-C

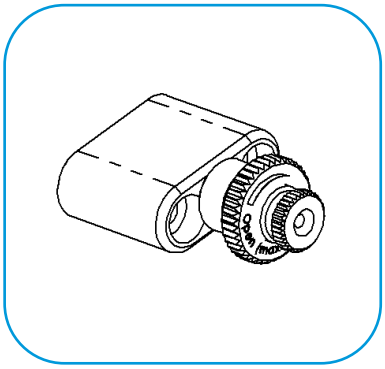

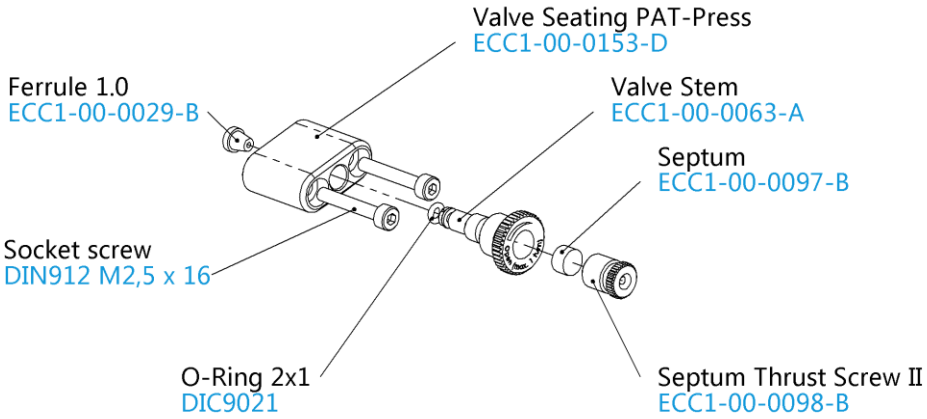

10 Technical support

Technical support for this product is exclusively provided by EL-CELL GmbH.

EL-CELL GmbH

Tempowerkring 8

21079 Hamburg - Germany

phone: +49 40 79012-737

fax: +49 40 79012-736

e-mail: info@el-cell.com

web: www.el-cell.com

11 Warranty

For a period of one year from the date of shipment, EL-CELL GmbH (hereinafter Seller) warrants the goods to be free from defect in material and workmanship to the original purchaser. During the warranty period, Seller agrees to repair or replace defective and/or nonconforming goods or parts without charge for material or labor, or, at the Seller's option, demand return of the goods and tender repayment of the price. Buyer's exclusive remedy is repair or replacement of defective and nonconforming goods, or, at Seller's option, the repayment of the price.

Seller excludes and disclaims any liability for lost profits, personal injury, interruption of service, or for consequential incidental or special damages arising out of, resulting from, or relating in any manner to these goods.

This Limited Warranty does not cover defects, damage, or nonconformity resulting from abuse, misuse, neglect, lack of reasonable care, modification, or the attachment of improper devices to the goods. This Limited Warranty does not cover expendable items. This warranty is void when repairs are performed by a non-authorized person or service center. At Seller's option, repairs or replacements will be made on site or at the factory. If repairs or replacements are to be made at the factory, Buyer shall return the goods prepaid and bear all the risks of loss until delivered to the factory. If Seller returns the goods, they will be delivered prepaid and Seller will bear all risks of loss until delivery to Buyer. Buyer and Seller agree that this Limited Warranty shall be governed by and construed in accordance with the laws of Germany.

The warranties contained in this agreement are in lieu of all other warranties expressed or implied, including the warranties of merchantability and fitness for a particular purpose.

This Limited Warranty supersedes all prior proposals or representations oral or written and constitutes the entire understanding regarding the warranties made by Seller to Buyer. This Limited Warranty may not be expanded or modified except in writing signed by the parties hereto.

EL-CELL®
electrochemical test equipment

User Manual

Release 1.51

PAT-Stand-1

Docking station for PAT series test cells

EL-CELL GmbH

Tempowerkring 8

21079 Hamburg - Germany

phone: +49 40 79012-737

fax: +49 40 79012-736

e-mail: info@el-cell.com

web: www.el-cell.com

Content

1 Product description

The PAT-Stand-1 is the docking station for a single PAT series test cell. When docked into the PAT-Stand-1, the test cell may be tested by any potentiostat or battery tester.

The compatible test cells and the PAT-Core concept are covered in detail by other manuals: (https://el-cell.com/support/manuals).

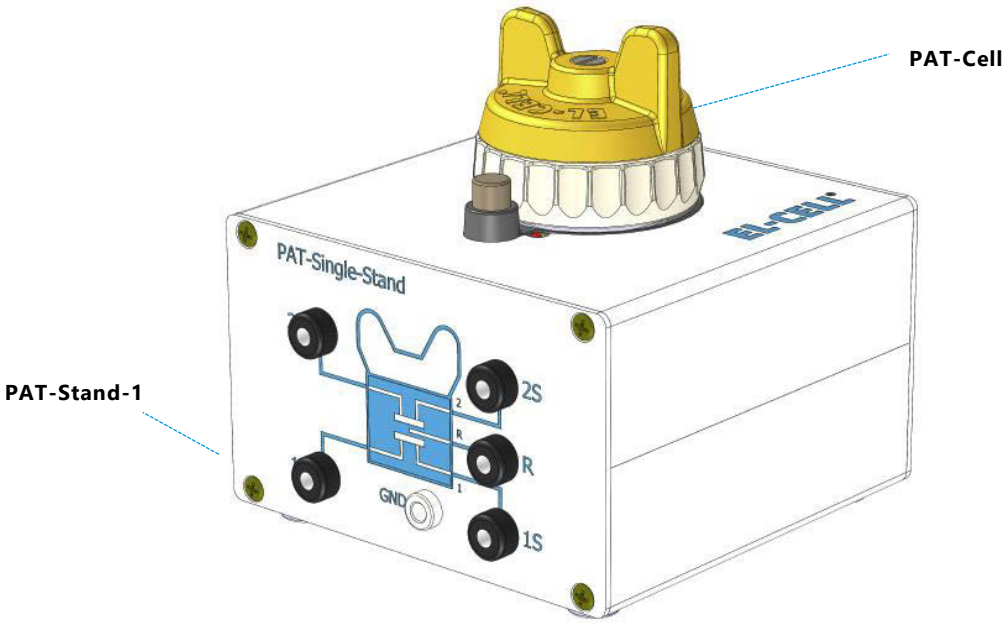

Features

- Docking station for one PAT series test cell, ready for connection to a potentiostat or battery tester channel.
- Compatible with all of today's potentiostats and battery testers.

2 Installation

Place the PAT-Stand-1 on a flat, dry and clean surface, for example on a bench top, inside a temperature chamber or a glove box. Then conncet the cell cable of your potentiostat or battery tester channel to the banana sockets at the front of the PAT-Stand-1.

Pin-Out of Sub-D F15 HD Connector "Cell" at PAT-Stand-1

Sub-D F15 Pin #	1	2	4	5	10
Signal	1S	2S	R	2	1

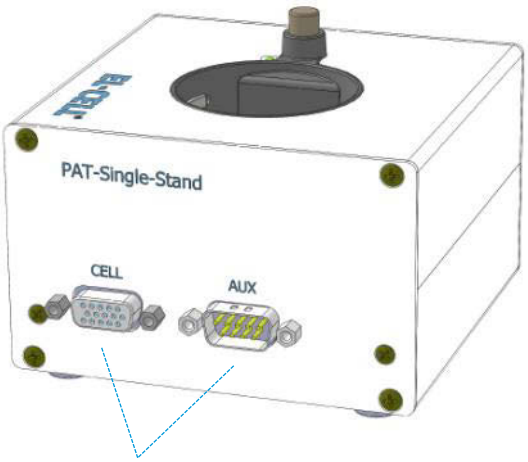

The "CELL" socket may optionally be used for connecting the PAT-Stand-1 to a potentiostat (instead of connecting to the banana sockets at the front). The "AUX" socket is for future use.

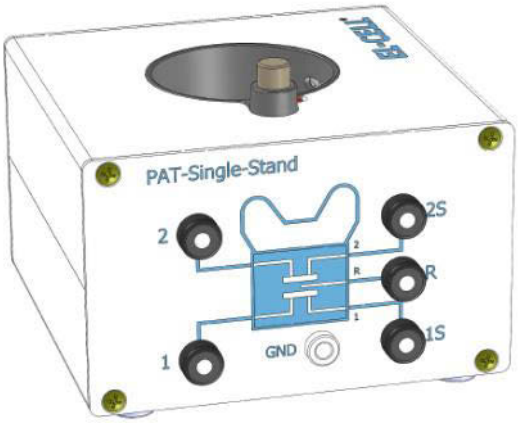

4 mm banana sockets for connection to the cell cable of a potentiostat or battery tester. Adapters for connection of 2 mm banana plugs are included.

3 Cleaning

Wipe the PAT-Stand-1 with a moist tissue. Do not use aggressive chemicals for cleaning. Protect the PAT-Stand-1 from dust and moisture.

4 Operation modes

Connect the cell cable of your potentiostat or battery tester channel to the banana sockets at the front of the PAT-Stand-1. For the different operation modes, see the table below.

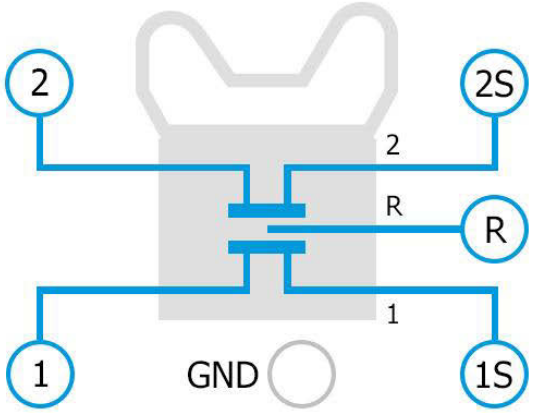

Operation mode 1: Cell voltage control (1 vs 2)

PAT-Stand-1	1	1S	2	2S	R
Potentiostat	WE	WE-Sense	CE	RE	(CE-Sense)
Battery tester	Plus	Plus-Sense	Minus	Minus-Sense	-

Operation mode 2: Half cell voltage control (1 vs R)

PAT-Stand-1	1	1S	2	2S	R
Potentiostat	WE	WE-Sense	CE	(CE-Sense)	RE
Battery tester	Plus	Plus-Sense	Minus	-	Minus-Sense

Operation mode 3: Half cell voltage control (2 vs R)

PAT-Stand-1	1	1S	2	2S	R
Potentiostat	CE	(CE-Sense)	WE	WE-Sense	RE
Battery tester	Minus	-	Plus	Plus-Sense	Minus-Sense

5 Cable colors and naming conventions

The naming convention and color codes of the potentiostat´s cell cable leads are not standardized between different manufacturers. The table below is an incomplete list of some popular instruments.

Important note: The application of our test cells is not limited to the potentiostats listed below. Our test cells can be used with all other potentiostats as well.

Exemplary potentiostat	**WE**	**WE-Sense**	**CE**	**CE-Sense**	**RE**
BioLogic SP, VMP, VSP, MPG	WE Red cable	Ref1 Red cable	CE Blue cable	Ref3 Blue cable	Ref2 White cable
Gamry Instruments Reference 600™ and 3000™, Interface 5000	Green cable	Blue cable	Red cable	Orange cable	White cable
Ivium Technologies IviumStat, Ivium-n-Stat, CompactStat, Vertex	W Red cable	S White cable	C Black cable	Not available	R Blue cable
Metrohm Autolab PGSTAT Series	WE Red cable	S Red cable	CE Black cable	Not available	RE Blue cable
Princeton Applied Research PARSTAT 2273	WKNG Green cable	SENSE Grey cable	CNTR Red cable	Not available	REF White cable
WonATech ZIVE SERIES	WE Green cable	WS Blue cable	CE Red cable	Not available	RE White cable

6 Unpacking

Check the contents of the packages against the list given below to verify that you have received all of the required components. Contact EL-CELL, if anything is missing or damaged. **NOTE**: Damaged shipments must remain within the original packaging for freight company inspection.

List of Components

- PAT-Stand-1 (without PAT-Cell) ECE1-00-0010-A
- 6 x adapter male 4 mm to female 2 mm ELT9081

7 Technical data

- Operating temperature: -20 to +70°C
- Humidity: non condensing
- Dimensions: 105 mm (width) x 113 mm (depth) x 80/110 mm (height without/ with PAT-Cell)
- Weight: 0.56/0.96 kg (without/with PAT-Cell)
- Protection Class: IP20 according to EN 60529

8 Spare parts

Adapter male 4 mm to female 2 mm ELT9081

9 Technical support

Technical support for this product is exclusively provided by EL-Cell GmbH.

EL-Cell GmbH

Tempowerkring 8

21079 Hamburg - Germany

phone: +49 40 79012-737

fax: +49 40 79012-736

e-mail: info@el-cell.com

web: www.el-cell.com

10 Warranty

For a period of one year from the date of shipment, EL-CELL GmbH (hereinafter Seller) warrants the goods to be free from defect in material and workmanship to the original purchaser. During the warranty period, Seller agrees to repair or replace defective and/or nonconforming goods or parts without charge for material or labor, or, at the Seller's option, demand return of the goods and tender repayment of the price. Buyer's exclusive remedy is repair or replacement of defective and nonconforming goods, or, at Seller's option, the repayment of the price.

Seller excludes and disclaims any liability for lost profits, personal injury, interruption of service, or for consequential incidental or special damages arising out of, resulting from, or relating in any manner to these goods.

This Limited Warranty does not cover defects, damage, or nonconformity resulting from abuse, misuse, neglect, lack of reasonable care, modification, or the attachment of improper devices to the goods. This Limited Warranty does not cover expendable items. This warranty is void when repairs are performed by a non-authorized person or service center. At Seller's option, repairs or replacements will be made on site or at the factory. If repairs or replacements are to be made at the factory, Buyer shall return the goods prepaid and bear all the risks of loss until delivered to the factory. If Seller returns the goods, they will be delivered prepaid and Seller will bear all risks of loss until delivery to Buyer. Buyer and Seller agree that this Limited Warranty shall be governed by and construed in accordance with the laws of Germany.

The warranties contained in this agreement are in lieu of all other warranties expressed or implied, including the warranties of merchantability and fitness for a particular purpose.

This Limited Warranty supersedes all prior proposals or representations oral or written and constitutes the entire understanding regarding the warranties made by Seller to Buyer. This Limited Warranty may not be expanded or modified except in writing signed by the parties hereto.

EL-CELL®
electrochemical test equipment

User Manual

Release 1.21

PAT-Core

Insulation sleeve with built-in separator and optional reference electrode and current collectors

EL-Cell GmbH

Tempowerkring 8

21079 Hamburg - Germany

phone: +49 40 79012-737

fax: +49 40 79012-736

e-mail: info@el-cell.com

web: www.el-cell.com

Content

1 Product description

The PAT-Core is the essential part of the PAT-Cell holding in place and precisely aligning the electrodes under test. The well-defined geometry of the PAT-Core enables high-quality two- and three-electrode tests of Li-ion and other battery materials as well as supercapacitors.

2 PAT-Core components

Every PAT-Core consists of three main parts, all available in different materials.

The **upper plunger**, serving as current collector for the upper electrode

The **insulation sleeve**, fixing the separator and the optional ring reference

The **lower plunger**, serving as current collector for the lower electrode

Figure: Possible configuration of the PAT-Core consisting of stainless steel plungers and insulation sleeve (PP) with separator and reference ring.

2.1 Upper plunger

By default, the upper plunger serves as the negative current collector. The given size fits for any thickness of the upper electrode up to 800 µm. The plungers are available in Stainless Steel (ss), Al and Cu, and as a special version made of PEEK polymer. The PEEK plungers are used in combination with a disc-shaped metal foil as the current collector. Many different metals are available including Au, Pt and Ni.

2.2 Insulation sleeves

Insulation sleeves are available in the materials polyproplyen (PP) and PEEK. The inner and outer ring are clipsed (PP) or sticked (PEEK) together with a separator or separator-like material (such as a solid state electrolyte) in between. For three-electrode tests, a reference ring can be additionally mounted into the insulation sleeve. An additional reed contact serves as the electrical contact for the reference ring. Different reference ring materials are available including lithium metal, LFP and LTO.

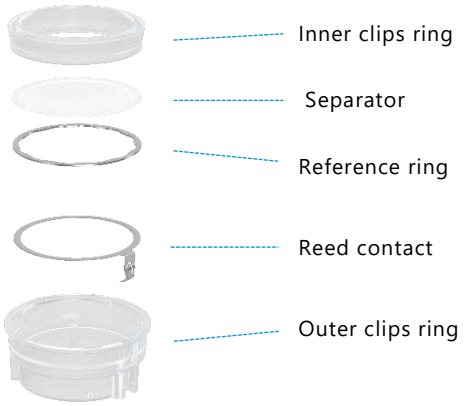

Figure: Components of the insulation sleeve (PP) for 3-electrode testing

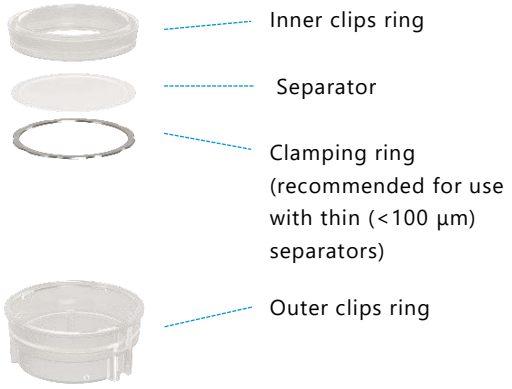

Figure: Components of the insulation sleeve (PP) for 2-electrode testing

Insulation sleeves may be ordered ready assembled (PP) or for self-assembly (PP or PEEK). When assembling the insulation sleeve yourself, please use separator circles of 21.6 mm diameter. All parts except the PEEK rings are for single-use.

2.3 Lower plunger

By default, the lower plunger serves as the positive current collector. The choice of materials is the same as for the upper plunger, however, the lower plunger comes in different sizes (height numbers) to account for different thicknesses of the lower electrode and the separator. Available height numbers range between 50 and 800 in steps of 50 µm.

The proper plunger height must be chosen to ensure that the pre-assembled separator is not excessively bent during assembly of the PAT-Core. The proper height number depends on both the thickness of the lower electrode and the thickness of the built-in separator. The following rules apply:

For a separator thickness below 100 µm:

Height number = Thickness of lower electrode (in µm) + 50

For a separator thickness above 100 µm:

Height number = Thickness of lower electrode (in µm) + half of the separator thickness (in µm)

Example: *You are using an insulation sleeve with 260 µm glass fiber together with a 90 µm thick LCO cathode. The above equation yields a height number of 90 + 260/2 = 220. The closest available height number is 200.*

3 Unpacking

By default all parts of the PAT-Core can be unpacked in ambient atmosphere before moving inside the glove box. Only the insulation sleeves (PP) must be moved inside vacuum-packed (pouch bag). Please note that some types of insulation sleeves are additionally packed in a can, which is optionally filled with pellets. The can should be opened outside the glove box, it is an outside packing only.

4 Pre-use treatment

All PEEK components such as PEEK rings for sleeve assembly and PEEK plungers must be dried at 80°C in vacuum <0.1 mbar overnight. For convenience, the PEEK plungers may be dried in the assembled state with feed wire and disc spring.

Be cautious when heating polyolefine (PE and PP) components as this may adversely affect their dimensional accuracy. Generally, polyolefine components can be used without prior drying.

5 Assembly instructions

This section describes how the PAT-Core in combination with the compatible test cells has to be assembled in order to conduct proper battery tests.

Note: The assembly has to take place under the protective atmosphere in a glove box.

5.1 Safety precautions

Use proper safety precautions when using hazardous electrode materials and electrolytes. Wear protective glasses and gloves to protect you against electrolyte that may accidentally spill out during disassembly. Upon cell disassembly, dispose all materials properly. Metallic lithium and some insertion compounds may decompose heavily in contact with water and other solvents, and can cause fire.

5.2 PEEK plunger assembly

The following steps describe the assembly and disassembly of the upper and lower PEEK plunger.

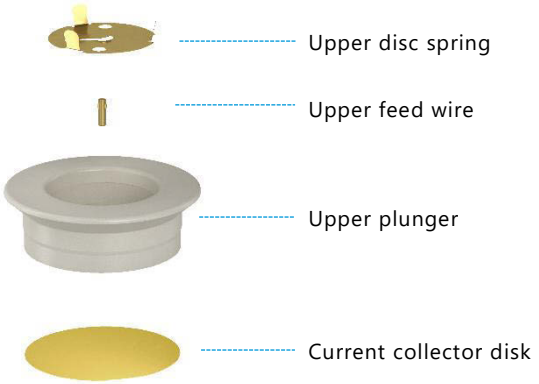

Figure: Upper plunger (PEEK)

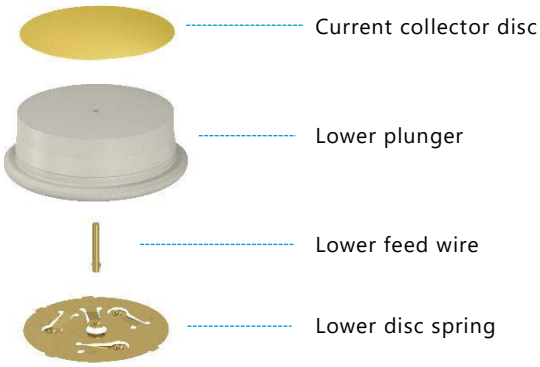

Figure: Lower plunger (PEEK)

Upper PEEK plunger assembly

1. Insert the upper feed wire into the hole of the upper plunger. Note the correct orientation.

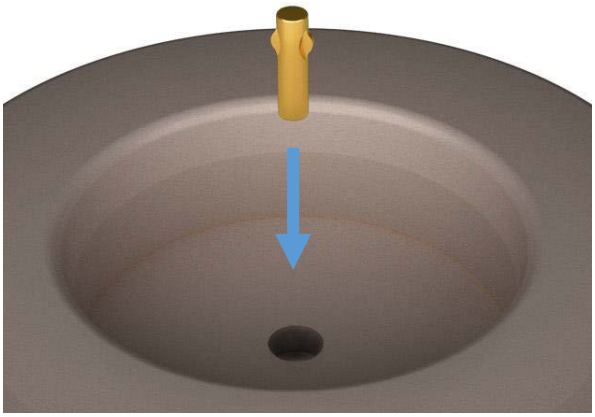

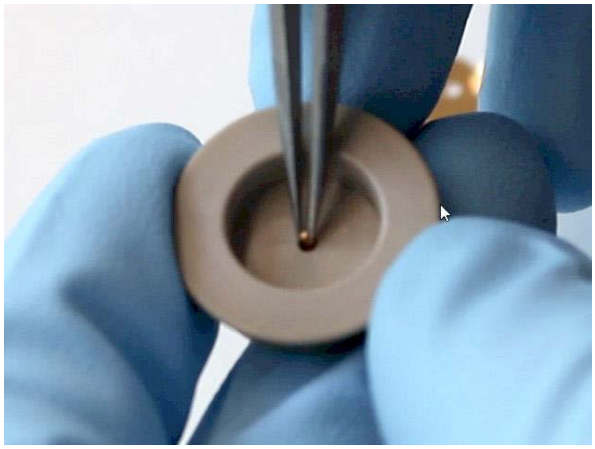

2. Insert the upper disc spring. Make sure the three tabs of the disc spring are properly snapped in.

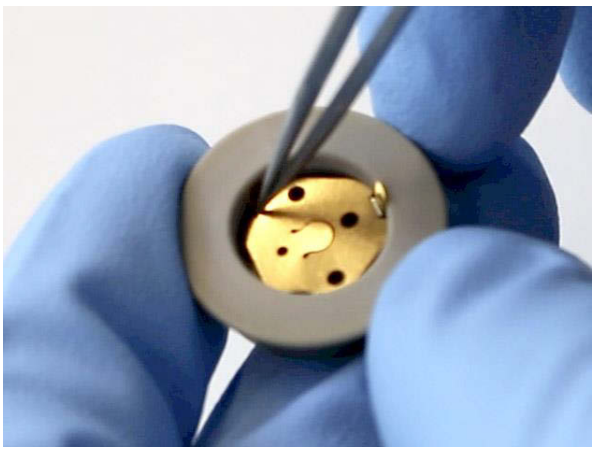

Lower PEEK plunger assembly

1. Insert the lower feed wire into the hole of the lower plunger. Note the correct orientation.

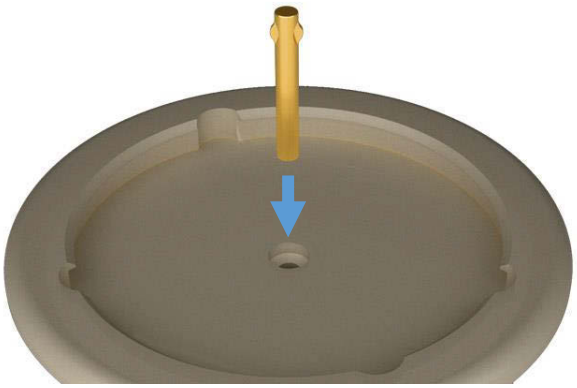

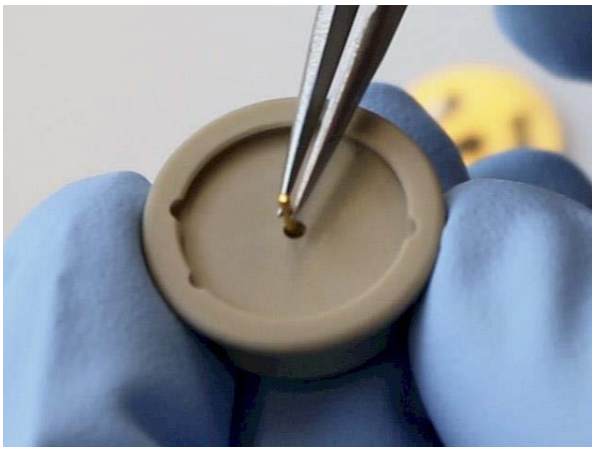

2. Insert the lower disc spring and turn it clockwise by 45 degrees in order to fix it in place.

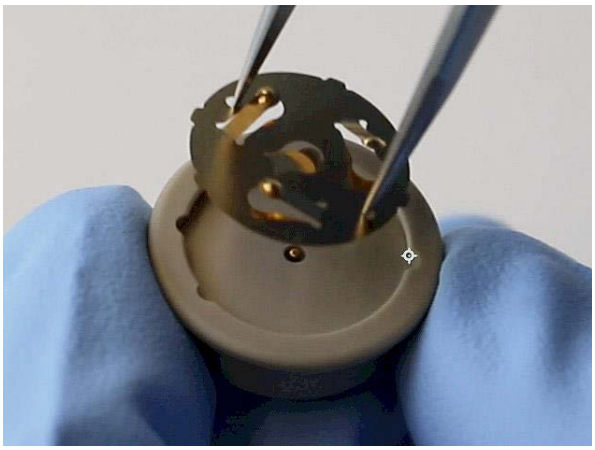

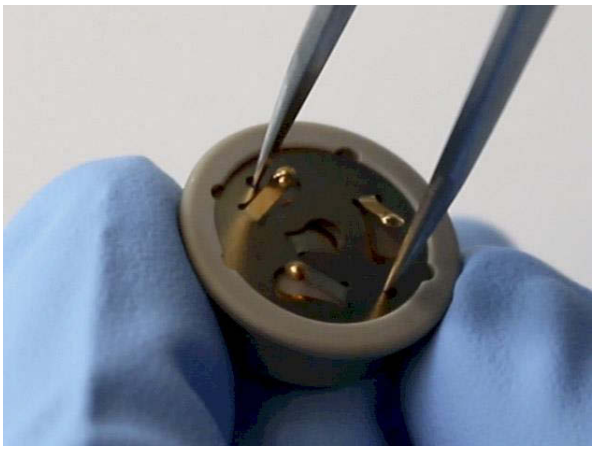

Upper PEEK plunger disassembly

1. Lever out the three tabs of the disc spring and remove the disc spring.

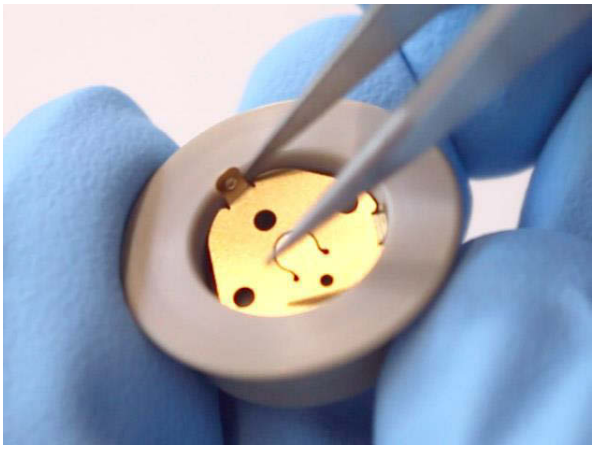

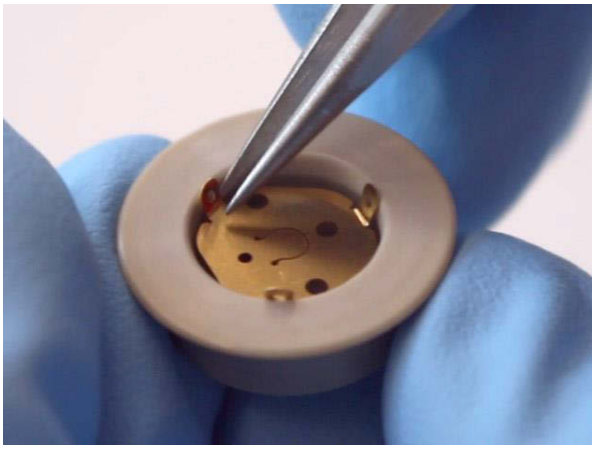

2. Remove the upper feed wire.

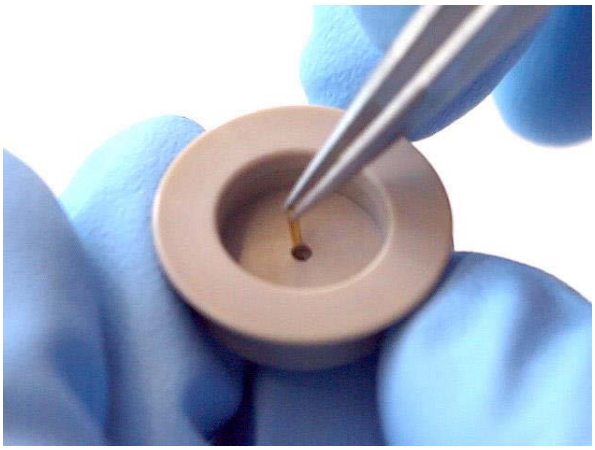

Lower PEEK plunger disassembly

1. Turn the disc spring counter-clockwise by 45 degrees and lift it out.

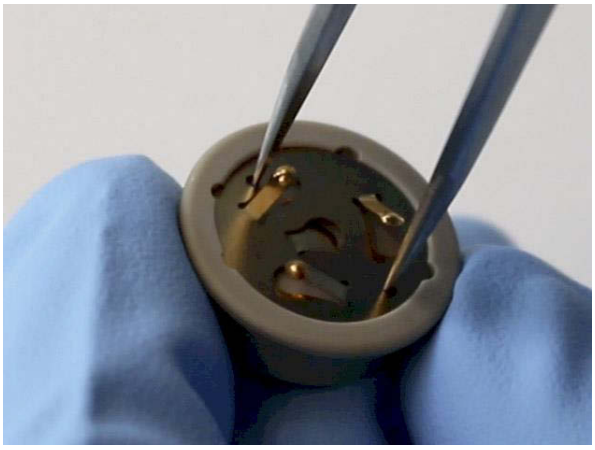

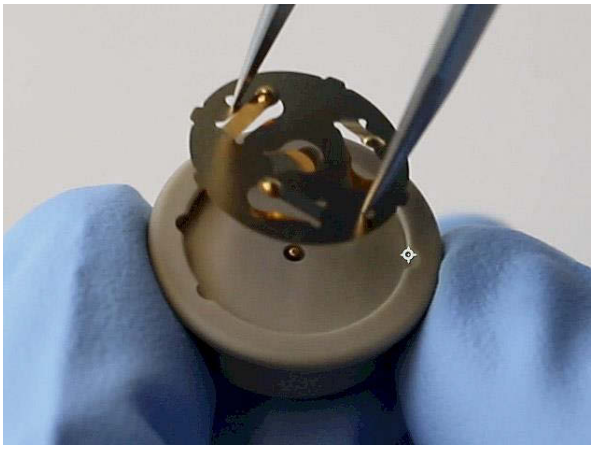

2. Remove the lower feed wire.

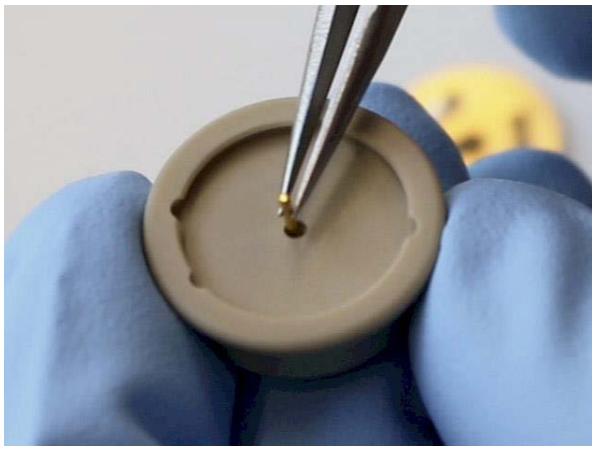

5.3 PEEK insulation sleeve assembly

The following steps describe the assembly of the PEEK insulation sleeves.

Note: For use with aprotic electrolytes, stick rings and separator must be properly dried upfront, and assembly of the sleeve must be carried out **inside a glove box**.

Recommended drying conditions: Overnight, vacuum, 80°C for stick rings; 160°C for glass fiber separator; room temperature for polyolefin based separator.

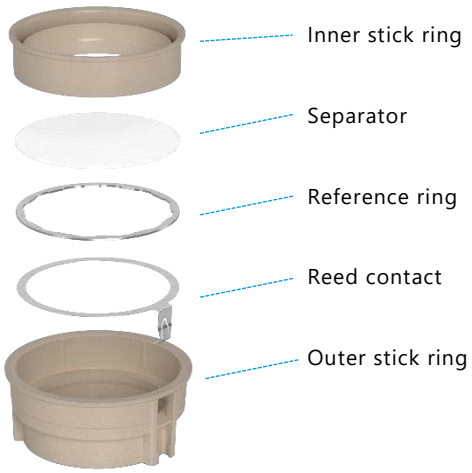

1. Insert the reed contact into the outer stick ring

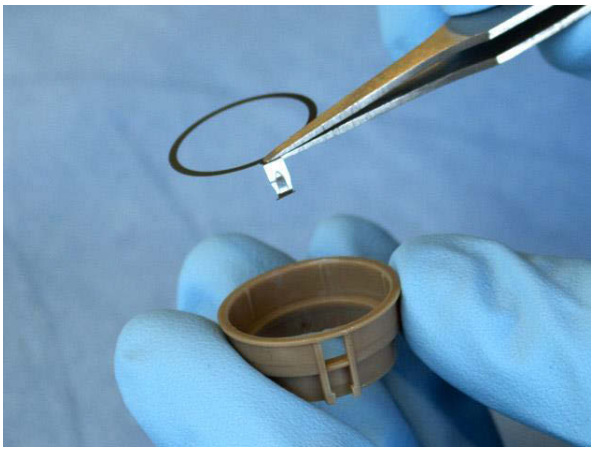

2. Insert the Reference ring on top of the assembly.

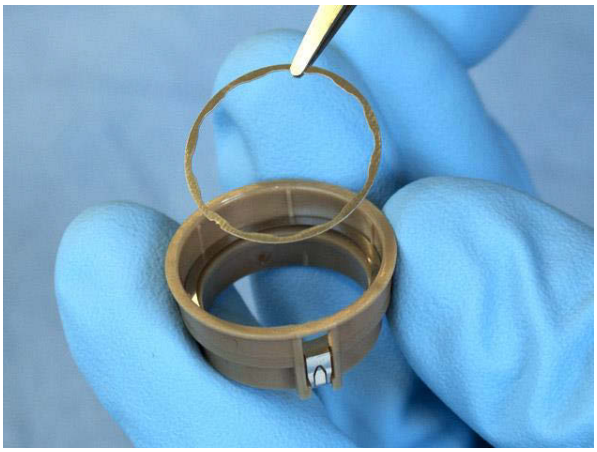

3. Insert the separator with diameter 21.6 mm.

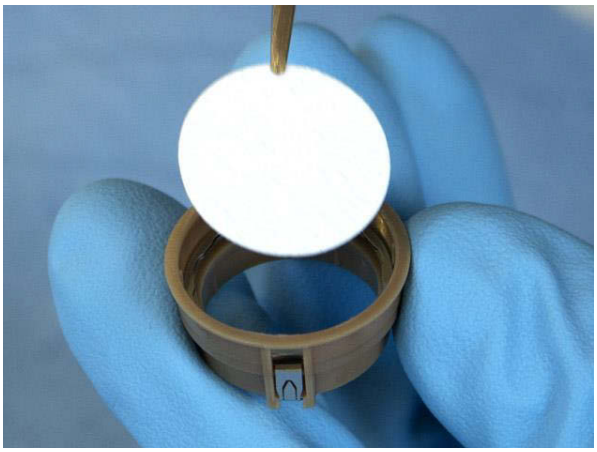

4. Put the inner stick ring on top and press it down.

5. Check the proper position of the contact tongue.

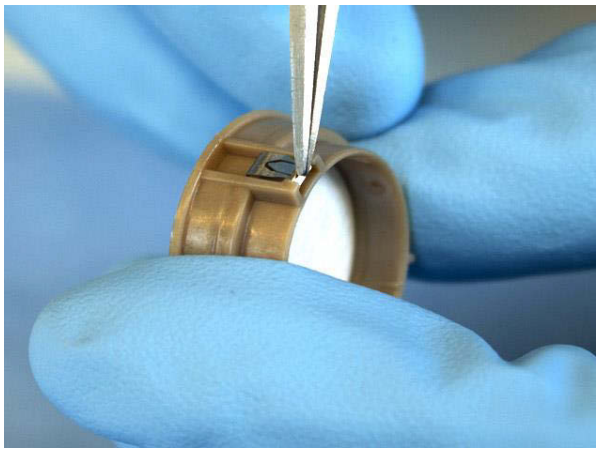

5.4 Standard assembly

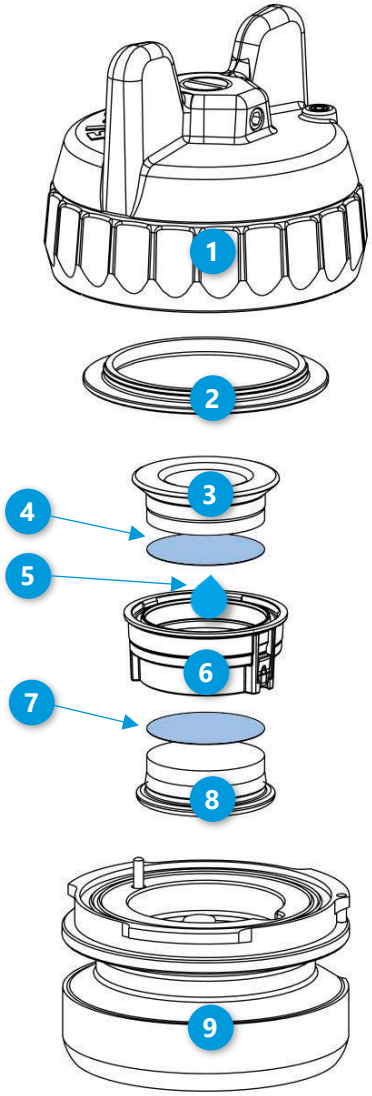

1. Put the **insulation sleeve (6)** onto the worktop with the smaller side pointing upwards.

2. Insert the **lower electrode (7)** into the sleeve with the active layer facing downwards.

3. Attach the **lower plunger (8)**. The lower plunger is available in different gap sizes in order to account for the thickness of the lower electrode and the separator used.

4. Turn the assembly upside down.

5. Align the contact spring of the sleeve with the horizontal contact pin inside the **cell base (9)**. Then insert the assembly into the cell base.

6. Evenly dispense approx. 100 µl of **electrolyte (5)** on top of the **separator** with a pipette.
Note: The optimum amount of electrolyte will depend on the thickness and porosity of the separator and the electrodes used.

7. Insert the **upper electrode (4)** into the insulation sleeve with the active layer facing downwards.

8. Attach the **upper plunger (3)**.

9. Attach the **screw cap (1)** to the cell base with the wing nut fully released.

10. Tighten the wing nut clockwise in order to seal the cell.

11. Attach the cell into a free socket of a PAT docking station.

6 Disassembly and cleaning

After disassembly, dispose all single-use components and electrodes properly. If the cell base has got contaminated with electrolyte, clean it with plenty of water and dry with compressed air. Use less electrolyte for subsequent tests. Plungers made of stainless steel have to be cleaned with plenty of water. If necessary, remove persistent dirt with aqueous nitric acid (20%, 2 hours at room temperature). All other cell components are for immediate re-use without cleaning.

Notes:

- Protect yourself against chemical hazards. Electrolyte may spill out during cleaning. Electrode materials and electrolyte may react with ambient atmosphere or solvents used for cleaning. Wear appropriate protection equipment, goggles and gloves.
- Clean all cell parts right after disassembly. Leaving cell parts in contact with ambient atmosphere while still being wetted with electrolyte may result in severe corrosion.

7 Common test cases

These tables show recommended PAT-Core components for the most common testing scenarios and can be used as a guide for building PAT-Cell test cells.

7.1 Testing with aprotic $LiPF_6$ based electrolytes

Lower electrode (+)	LCO/NCM/LFP/..	LCO/NCM/LFP..	Graphite	Graphite	LCO/NCM/LFP..
Upper electrode (-)	Li metal	Li metal	Li metal	Li metal	Graphite/LTO
Lower plunger	SS or Al	SS or Al	SS or Cu	SS or Cu	SS or Al
Upper plunger	SS or Cu	SS or Cu	SS or Cu	SS or Cu	SS or Cu
Reference	Li metal	none	Li metal	none	Li metal
Separator	FS-5P	FS-5P	FS-5P	FS-5P	FS-5P
T/°C	<70°C	<70°C	<70°C	<70°C	<70°C
Lid seal	PE	PE	PE	PE	PE
Sleeve (single- use)	Insulation sleeve PP (Li-Reference, Separator FS-5P) (10 pcs) ECC1-00-0210-V/X	Insulation sleeve PP (Separator FS-5P) (10 pcs) ECC1-00-0210-W/X	Insulation sleeve PP (Li-Reference, Separator FS-5P) (10 pcs) ECC1-00-0210-V/X	Insulation sleeve PP (Separator FS-5P) (10 pcs) ECC1-00-0210-W/X	Insulation sleeve PP (Li-Reference, Separator FS-5P) (10 pcs) ECC1-00-0210-V/X

SS = Stainless steel 316L (1.4404)

7.2 Testing with aprotic supercap electrolytes[1]

Lower electrode (+)	Activated Carbon (AC)
Upper electrode (-)	AC
Lower plunger	SS or Al
Upper plunger	SS or Al
Reference	Activated carbon on stainless steel
Separator	FS-5P
T/°C	<70°C
Lid seal	PE
Sleeve (single-use)	Insulation sleeve PP (AC(SS)-Reference ring, Separator FS-5P) (10 pcs) ECC1-00-0450-B/X

[1] R_4NBF_4 in acetonitrile or propylene carbonate

AC = Activated carbon

7.3 Testing with aqueous supercap electrolytes

Lower electrode (+)	AC
Upper electrode (-)	AC
Lower plunger	PEEK
Upper plunger	PEEK
Current collector disc	Au
Reference	AC
Separator	GF/A ECC1-01-0011-A/L
T/°C	<70°C
Lid seal	PE
Sleeve (reusable)	Plain Insulation sleeve PEEK, disassembled ECC1-00-0510-T
Reed contact	Au plated SS ECC1-00-0186-D/X
Reference ring	AC ECC1-00-0182-T/X

7.4 Testing with aprotic high-temperature electrolytes

Lower electrode (+)	LCO/NCM/LFP..
Upper electrode (-)	Graphite/LTO
Lower plunger	SS or Al
Upper plunger	SS or Cu
Reference	Li metal
Separator	GF/A ECC1-01-0011-A/L
T/°C	<200°C
Lid seal	PEEK or PTFE
Sleeve (reusable)	Plain Insulation sleeve PEEK, disassembled ECC1-00-0510-T
Reed contact	Ni plated SS ECC1-00-0186-A/X
Reference ring	Li metal plated SS ECC1-00-0182-O/X

8 Separator features

Separator	**FS-5P (Freudenberg Viledon FS 2226E+Lydall Solupor 5P09B)**	**Freudenberg Viledon FS 3005-25**	**Whatman GF/A**
Thickness	220µm	25µm	260µm
Material	PP fiber/PE membrane	PET fiber/Al_2O_3	Borosilicate glass fiber
Porosity	FS: 67%/ 5P: 86%	55%	91%
Wettability	Good	Good	Excellent
Resistance to dendrites	Good	Poor	Modest
Ability for full cell cycle tests	Excellent	Good	Good
Ability for half cell cycle tests (vs. Li)	Excellent	Poor	Modest
Ability for full cell EIS	Excellent	Excellent	Excellent
Ability for half cell EIS	Modest	Poor	Good
Order no (Insulation sleeve (PP) with Li reference)	ECC1-00-0210-V/X	ECC1-00-0210-A/X	ECC1-00-0210-O/X

9 PAT Components overview

The listed items are only an excerpt of the available product range. Please visit el-cell.com for more information.

9.1 Upper plunger

Article Name	***Material***	***Usage***	***Order number***
Upper plunger, Cu	Copper (Cu >99.9%, E-CU 58)	Single-use	ECC1-01-0026-B
Upper plunger, Al	Aluminum (Al >99.5%, EN-AW-1050)	Single-use	ECC1-01-0026-A
Upper plunger, SS	Stainless steel 316L (1.4404)	Reusable	ECC1-01-0026-C
Upper plunger PEEK (Au), assy[1]	PEEK	Reusable*	ECC1-01-0065-A

* chapter 4

[1] including feed wire (Au) and spring disc (Au)

9.2 Lower plunger

Article Name	***Material***	***Usage***	***Order number***
Lower plunger, Al	Aluminum (Al >99.5%, EN-AW-1050)	Single-use	ECC1-01-0027-A_x*
Lower plunger, Cu	Copper (Cu >99.9%, E-CU 58)	Single-use	ECC1-01-0027-B_x*
Lower plunger, SS	Stainless steel 316L (1.4404)	Reusable	ECC1-01-0027-C_x*
Lower plunger PEEK (Au), assy[1]	PEEK	Reusable**	ECC1-01-0055-A_50

* x=Height number, chapter 2.3

** chapter 4

[1] including feed wire (Au) and spring disc (Au)

9.3 Current collector discs

These discs are for use with PEEK plungers. Other materials are available on request.

Article Name	***Material***	***Usage***	***Order number***
Current collector 18 mm, Au (5 pcs)	Gold (Au>99%)	Reusable	ECC1-00-0069-A/V
Current collector 18 mm, Ti (5 pcs)	Titanium (Ti >99%, grade 2)	Reusable	ECC1-00-0069-C/V
Current collector 18 mm, Pt (5 pcs)	Platinum (Pt>99%)	Reusable	ECC1-00-0069-D/V
Current collector 18 mm,Ni (5 pcs)	Nickel (Ni>99%)	Reusable	ECC1-00-0069-F/V

9.4 Reed contacts

Article Name	***Material***	***Usage***	***Order number***
Reed contact (Ni on SS) (10 pcs)	Nickel (Ni>99%) plated Stainless steel 316L (1.4404)	Single-use	ECC1-00-0186-A/X
Reed contact (Au on SS) (10 pcs)	Gold (Au>99%) plated Stainless steel 316L (1.4404)	Reusable	ECC1-00-0186-D/X

9.5 Reference rings

Article Name	***Material***	***Usage***	***Order number***
Reference ring (Mg) (10 pcs)	Magnesium	Single-use	ECC1-00-0182-F/X
Reference ring (Li) (10 pcs)	Lithium	Single-use	ECC1-00-0182-O/X
Reference ring (AC on SS) (10 pcs)	Activated carbon plated Stainless steel 316L (1.4404)	Single-use	ECC1-00-0182-S/X
Reference ring (AC) (10 pcs)	Activated carbon	Single-use	ECC1-00-0182-T/X

9.6 Insulation sleeves

Article Name	***Reference material***	***Separator material***	***Separator thickness***	***Order number***
Insulation sleeve PP (Li-Reference, Separator FS 3005-25) (10 pcs)	Li metal	PET fiber/Al_2O_3	25 µm	ECC1-00-0210-A/X
Insulation sleeve PP (Separator FS 3005-25) (10 pcs)	-	PET fiber/Al_2O_3	25 µm	ECC1-00-0210-B/X
Plain Insulation sleeve PP (disassembled) (10 pcs)	-	-	-	ECC1-00-0210-D/X
Insulation sleeve PP (Li-Reference, Separator GF/A) (10 pcs)1	Li metal	Borosilicate glass fiber	260 µm	ECC1-00-0210-O/X
Insulation sleeve PP (Separator GF/A) (10 pcs)	-	Borosilicate glass fiber	260 µm	ECC1-00-0210-P/X
Insulation sleeve PP (Li-Reference, FS-5P) (10 pcs)	Li metal	PP fiber/PE membrane	220 µm	ECC1-00-0210-V/X
Insulation sleeve PP (Separator FS-5P) (10 pcs)	-	PP fiber/PE membrane	220 µm	ECC1-00-0210-W/X
Insulation sleeve PP (Li-Reference, Separator Customized) (10 pcs)	Li metal	-	-	ECC1-00-0420-A/X
Insulation sleeve PP (AC-Reference ring, Separator FS-5P) (10 pcs)	Activated carbon	PP fiber/PE membrane	220 µm	ECC1-00-0450-D/X
Insulation sleeve PP (AC(SS)-Reference ring, Separator FS-5P) (10 pcs)	Activated carbon on stainless steel	PP fiber/PE membrane	220 µm	ECC1-00-0450-B/X
Insulation sleeve PP (Mg-Reference, Separator GF/A) (10 pcs)	Magnesium	Borosilicate glass fiber	260 µm	ECC1-00-0210-H/X
Plain Insulation sleeve PEEK, disassembled	-	-	-	ECC1-00-0510-T

FS 3005-25 = Freudenberg Viledon FS 3005-25

GF/A = Whatman GF/A

FS-5P = Freudenberg Viledon FS 2226E + Lydall Solupor 5P09B

10 Technical support

Technical support for this product is exclusively provided by EL-Cell GmbH.

EL-Cell GmbH

Tempowerkring 8

21079 Hamburg - Germany

phone: +49 40 79012-737

fax: +49 40 79012-736

e-mail: info@el-cell.com

web: www.el-cell.com

11 Warranty

For a period of one year from the date of shipment, EL-CELL GmbH (hereinafter Seller) warrants the goods to be free from defect in material and workmanship to the original purchaser. During the warranty period, Seller agrees to repair or replace defective and/or nonconforming goods or parts without charge for material or labor, or, at the Seller's option, demand return of the goods and tender repayment of the price. Buyer's exclusive remedy is repair or replacement of defective and nonconforming goods, or, at Seller's option, the repayment of the price.

Seller excludes and disclaims any liability for lost profits, personal injury, interruption of service, or for consequential incidental or special damages arising out of, resulting from, or relating in any manner to these goods.

This Limited Warranty does not cover defects, damage, or nonconformity resulting from abuse, misuse, neglect, lack of reasonable care, modification, or the attachment of improper devices to the goods. This Limited Warranty does not cover expendable items. This warranty is void when repairs are performed by a non-authorized person or service center. At Seller's option, repairs or replacements will be made on site or at the factory. If repairs or replacements are to be made at the factory, Buyer shall return the goods prepaid and bear all the risks of loss until delivered to the factory. If Seller returns the goods, they will be delivered prepaid and Seller will bear all risks of loss until delivery to Buyer. Buyer and Seller agree that this Limited Warranty shall be governed by and construed in accordance with the laws of Germany.

The warranties contained in this agreement are in lieu of all other warranties expressed or implied, including the warranties of merchantability and fitness for a particular purpose.

This Limited Warranty supersedes all prior proposals or representations oral or written and constitutes the entire understanding regarding the warranties made by Seller to Buyer. This Limited Warranty may not be expanded or modified except in writing signed by the parties hereto.

EL-CELL®
electrochemical test equipment

Quick Guide
EC-Link Software

Release 2.6

Data logger software

EL-Cell GmbH

Tempowerkring 8

21079 Hamburg - Germany

phone: +49 (0)40 790 12 737

fax: +49 (0)40 790 12 736

e-mail: info@el-cell.com

web: www.el-cell.com

Content

1 What is EC-Link?

EC-Link is the data logger software coming with the following instruments.

- PAT-Cell-Press
- PAT-Cell-Gas S and PAT-Cell-Gas SP
- PAT-Chamber-16
- PAT-Stand-16
- ECD-3, ECD-3-nano, ECD-2-DL, ECD-nano-DL
- ECC-Press-DL

With the EC-Link software, the voltage, current and sensor signals of either a single test cell or multiple test cells are recorded into log files and viewed as strip-charts. One set of files is being created for each cell. The files contain the cell data – current, cell voltage and the two half cell voltages – together with the sensor data (temperature and pressure or dilation). EC-Link employs an highly efficient data reduction algorithm to create a compressed log file from the raw data stream. In addition, the software computes cycle-wise integrated and differential capacity data and stores them in separate result files.

Connection between the PC host and the data logger is being established via USB. Multiple data loggers and associated instances of the EC-Link software can be run in parallel on the same PC. The EC-Link software is licence-free. Updates are regularly available at no charge.

2 EC-Link System Requirements

You can install the EC-Link software on any computer running one of these operating systems: Windows 10, Windows 8, Windows 7.

3 Installing the EC-Link Software

1. You must be logged into an account with administrator privileges.
2. Save your work and close down all active programs.
3. On the installation medium, run X:\setup. This will install the EC-Link software. Follow any instructions that may appear on your screen.
4. Once installation is finished, plug in the provided USB cable into both the host PC and the instrument's controller box. When connecting the hardware for the first time, Windows will automatically install the driver.
5. Launch the EC-Link software if you have not already done.

6. After a few seconds, the EC-Link software should report a valid connection and you are ready to start the log.

4 Running the EC-Link Software

EC-Link is supplied with a suitable program configuration for you. Depending on whether you operate EC-Link with one or multiple test cells, the set program interface is slightly different.

4.1 Using EC-Link in a single cell configuration

This configuration comes as a standard when using the following devices:

- PAT-Cell-Press
- PAT-Cell-Gas S and PAT-Cell-Gas SP
- ECD-3, ECD-3-nano, ECD-2-DL, ECD-nano-DL
- ECC-Press-DL

1. In the leftmost column, checkmark the channels you want to log. This setting cannot be changed while logging.

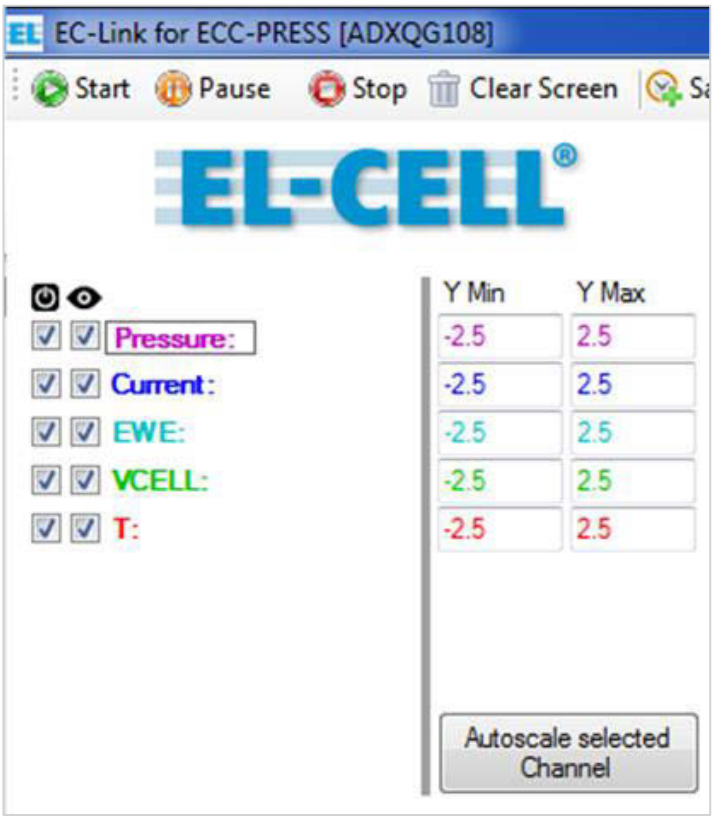

2. In the second left column, checkmark the channels to view. This setting can be changed at any time. Unmarking the view box of a given channel during measurement will only remove its trace from the strip chart; the channel's data will still be written into the log files.

3. In the headline, choose an appropriate sample rate ('Samples per Second').

4. In the headline, click the 'Start' button to start data logging. The program will open the Battery Data Processing dialog asking for the parameters required to calculate additional ("secondary") data from the primary (raw) data. The default setting will be appropriate in most cases. Details on the different log files created for each measurement are given in chapter 5.

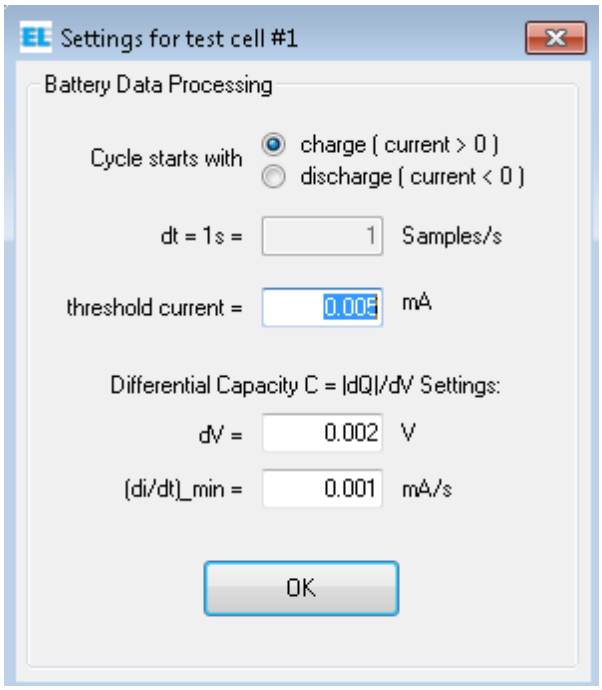

- 'Cycle starts with charge (current > 0)' applies to full cells (such as LCO vs Graphite) and "cathode" half cells (such as LCO vs Lithium). 'Cycle starts with discharge (current < 0)' applies to "anode" half cells (such as Graphite vs Lithium). This parameter is required to distinguish between cycles.

- 'threshold current' refers to the absolute value of the current considered as zero. This parameter is required to detect start and end of cycles. For proper detection, the chosen threshold must be larger than the total error of the measured current.

- 'dV' refers to the voltage difference ΔV used by the software to calculate the differential capacitance $\Delta Q/\Delta V$ from the primary data. The smaller ΔV is chosen, the better gets the voltage resolution, but the larger the noise of the calculated capacitance values.

- '(di/dt)_min' refers to the minimum change of current, below which the algorithm considers the current as constant. Only at constant current, the differential capacitance values are being calculated.

5. Choose the active y-axis of the strip chart by clicking on the respective channel name or on the channel trace in the chart.

6. Click the 'Pause' button to halt data logging, and the resume button to continue.

7. Click the 'Stop' button to stop data logging.

8. Click the 'Clear Screen' button to clear the display. The Clear command does not affect the log files.

9. For a given channel, y-min and y-max define the vertical limits of the displayed trace. Chosing y-min larger than y-max will reverse the y-axis.

10. Clicking the 'Autoscale selected Channel' button will affect the data in the presently displayed time window only.

11. Click the 'View File' button to view the log file data in text format.

12. Double click on one of the channel names to display the current reading in large characters (multimeter mode).

13. In the headline, click the 'Post-Process' button in order to re-export secondary log file data from any previous measurement with new processing parameters. Note that this function can only be applied to the original (uncompressed) *.txt log file.

4.2 Using EC-Link in a multiple cells configuration

This configuration comes as a standard when using the following devices:

- PAT-Chamber-16
- PAT-Stand-16

The EC-Link software continuously acquires data at a fixed rate of about 1 Hz. The signals of the inserted test cells are displayed in strip charts, one chart for each cell. If no test cell is inserted, the corresponding channels are displayed as zero. Data recording can be started for an inserted test cell only.

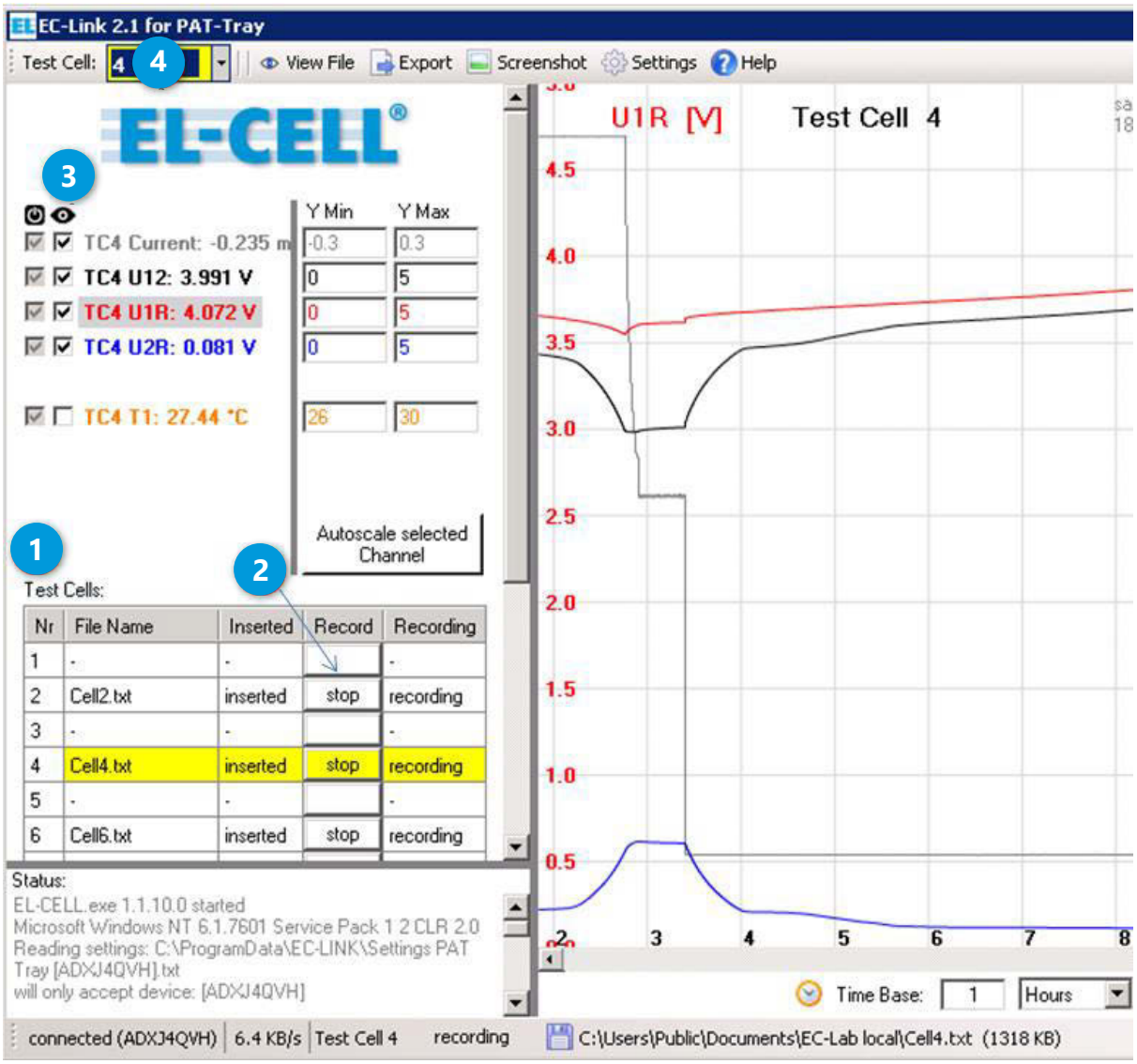

The insertion and recording status of all cell positions is given in the test cell table. 1

1. Data recording for a given cell can be started in two ways.

- Insert a new cell into the docking station and follow the instructions of the 'New cell detected' dialog.
- Press the 'Record' button 2 of a cell which has been inserted previously and has not been started at that time.

In either case, the program will open the 'Battery Data Processing' dialog asking for the parameters required to calculate additional "secondary" data from the primary (raw) data. The default setting will be appropriate in most cases. Details on the different log files created for each measurement are given in chapter 5.

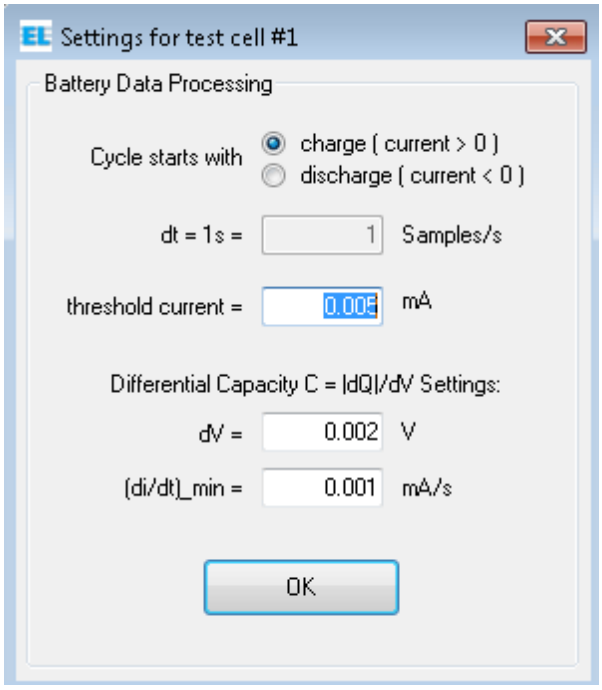

- 'Cycle starts with charge (current > 0)' applies to full cells (such as LCO vs Graphite) and "cathode" half cells (such as LCO vs Lithium). 'Cycle starts with discharge (current < 0)' applies to "anode" half cells (such as Graphite vs Lithium). This parameter is required to distinguish between cycles.
- 'threshold current' refers to the absolute value of the current considered as zero. This parameter is required to detect start and end of cycles. For proper detection, the chosen threshold must be larger than the total error of the measured current.
- 'dV' refers to the voltage difference ΔV used by the software to calculate the differential capacitance $\Delta Q/\Delta V$ from the primary data. The smaller ΔV is chosen, the better gets the voltage resolution, but the larger the noise of the calculated capacitance values.
- '(di/dt)_min' refers to the minimum change of current, below which the algorithm considers the current as constant. Only at constant current, the differential capacitance values are being calculated.

2. Checkmark the channels you want to view 3. This setting will apply to all cells.

3. Choose the test cell 4, the strip chart of which you want to view. With the mouse wheel, you can scroll through the test cells.

4. Select the active y-axis of the strip charts by clicking on the respective channel name or on the channel trace in the chart.

5. For a given channel, y-min and y-max define the vertical limits of the displayed trace. Choosing y-min larger than y-max will reverse the y-axis.

6. Clicking the 'Autoscale selected Channel' button will affect the data of all inserted cells in the presently displayed time window.

7. Click the 'View file' button in the headline to view the log file data of the selected channel in text format.

8. Double-click on a channel name to display the current reading in large characters (multimeter mode).

9. Data recording of a given test cell can be stopped in two ways. In either case the corresponding log files will be closed.

   - Press the 'Stop' button of the test cell, or
   - remove the test cell from the docking station.

10. Data recording can be paused by clicking, in the test cell table, the 'Pause' button of the respective test cell, and resumed by clicking the 'Resume' button. This way the test cell can be temporarily removed from the docking station without having to create a second set of log files when resuming the measurement.

5 Log files

For a given measurement, EC-Link generates six different log files.

Important Note: Log files should always be saved on a local hard drive to prevent data corruption due to network crashes.

- *.txt contains the uncompressed (primary) data with constant time interval between data rows.

  Format (Columns):

  - Sample (optional)
  - Date and Time (optional)
  - Time (s) (since measurement start)
  - Time UTC (s) (since 1970, optional)
  - Current (mA) (cell current in mA)
  - V12 (V) (cell voltage in V)
  - V1R (V) (half cell voltage 1 vs R)
  - V2R (V) (half cell voltage 2 vs R)
  - T (°C) (temperature)
  - Pressure (bar) or Dilation (µm)
  - Cycle
  - t_cycle (s) (time of given cycle)
  - P (mW) (power)
  - Qtot (mAh) (charge obtained by integration of current over time)
  - Qcd (mAh) (same as Qtot, but nulled at start of each half cycle)
  - |Qcd| (mAh) (absolute value of Qcd)
  - Qc (mAh) (charge of positive half cycle, nulled at start of half cycle)
  - Qd (mAh) (|charge| of negative half cycle, nulled at start of half cycle)
  - Wcd (mWh) (energy, nulled at start of each half cycle)

- *_Small.txt contains the reduced (compressed) data with varying time interval between data rows. Format: same as *.txt

- *-Cycle.txt contains the “cycle-wise” computed integral data

  Format (Columns):

  - Cycle
  - Time (s)

- Qc (mAh) (charge of positive half cycle)
- Qd (mAh) (|charge| of negative half cycle)
- Wc (mWh) (energy of positive half cycle)
- Wd (mWh) (|energy| of negative half cycle)
- Qd/Qc (charge efficiency)
- Wd/Wc (energy efficiency)

- *-C12.txt contains the differential capacitance data of the full cell

  Format (Columns):

  - Cycle
  - Time (s)
  - t_cycle (s)
  - V12 (V)
  - Delta V12 (V)
  - Delta Q (mAh)
  - C12=|Delta Q|/Delta V12 (mAh/V)

- *-C1R.txt contains the differential capacitance data of the positive half cell

  Format (Columns):

  - Cycle
  - Time (s)
  - t_cycle (s)
  - V1R (V)
  - Delta V1R (V)
  - Delta Q (mAh)
  - C1R=|Delta Q|/Delta V1R (mAh/V)

- *-C2R.txt contains the differential capacitance data of the negative half cell

  Format (Columns):

  - Cycle
  - Time (s)
  - t_cycle (s)
  - V2R (V)
  - Delta V2R (V)
  - Delta Q (mAh)

– C2R=|Delta Q|/Delta V2R (mAh/V)

In addition to the six log files with the file extension ".txt", EC-Link generates a single empty file *.patmsr.

6 Settings

The settings of the EC-Link software being specific to the instrument are contained in the file C:\ProgramData\EC-Link\Settings.... A copy of this file can also be found on the installation media and may be used to restore the original settings. Within the program, in the Settings/Calibration dialog, you can only modify the number of decimal digits displayed, the colours of the individual traces, and the maximum error of the data reduction algorithm.

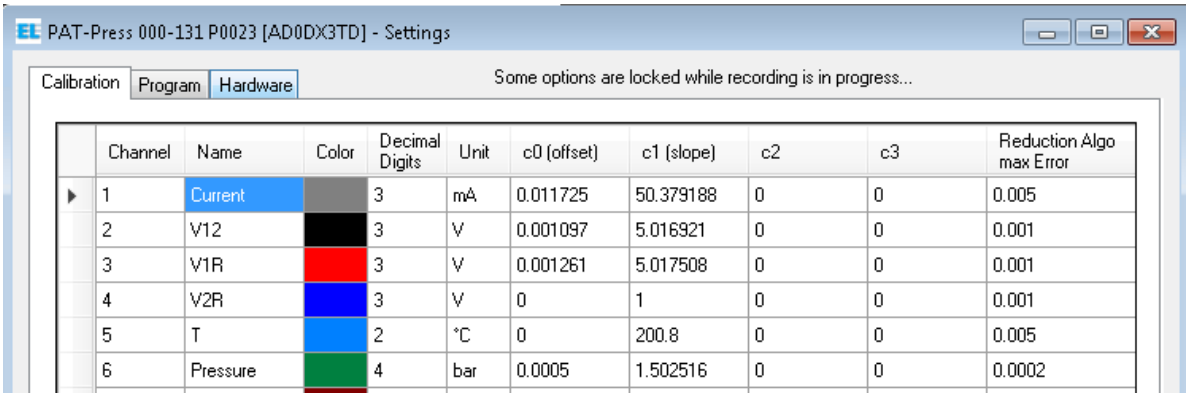

Channel	Name	Color	Decimal Digits	Unit	c0 (offset)	c1 (slope)	c2	c3	Reduction Algo max Error
1	Current		3	mA	0.011725	50.379188	0	0	0.005
2	V12		3	V	0.001097	5.016921	0	0	0.001
3	V1R		3	V	0.001261	5.017508	0	0	0.001
4	V2R		3	V	0	1	0	0	0.001
5	T		2	°C	0	200.8	0	0	0.005
6	Pressure		4	bar	0.0005	1.502516	0	0	0.0002

The 'Reduction Algo max Error' ΔE has a great impact on the efficiency of the data reduction and hence on the size of the compressed *_Small.txt log file. In short, the algorithm checks if a given data point is more than ΔE off the straight line connecting two adjacent data points. If so, then the given data point is kept in *_Small.txt, otherwise it is discarded. Note that the algorithm is applied to all channels. Therefore, if ΔE is set to zero for any channel, then no data reduction takes place.

In the Settings/Program dialog, you can select additional columns to be logged into the *.txt and *_Small.txt log files. The UTC time format is especially useful in case different consecutive measurements need to be referred to the same time scale.

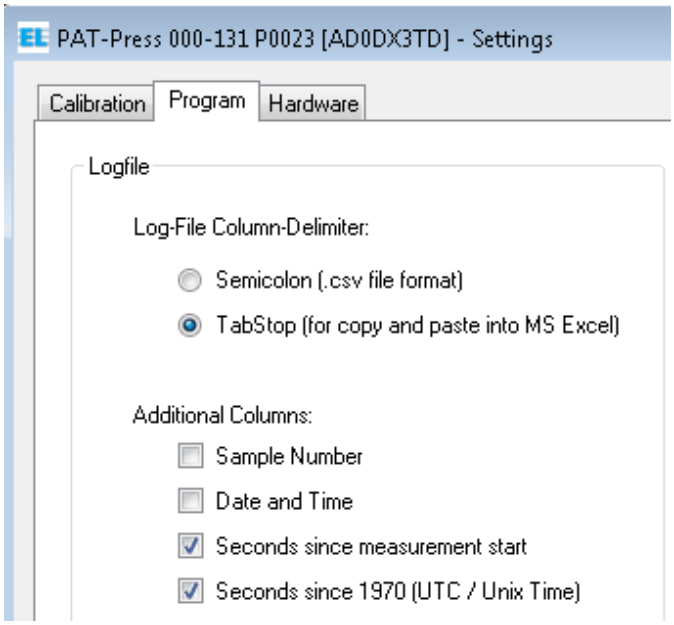

7 Post-Process

In the headline of the program window, click the 'Post-Process' button in order to re-process existing *.txt log files using new processing parameters. Note that this function can only be applied on the original (uncompressed) *.txt log files.

The Post Process dialog prompts for the maximum error of the reduced data written into the *Small.txt log file, and for the parameters used to create the integrated cycle-wise data (*-Cycle.txt) and the differential capacitance data (*-C12.txt, *-C1R.txt and *-C2R.txt). For more details on the parameters refer to chapter 4.

8 Running Multiple Data Loggers

It is possible to connect multiple USB data loggers (and associated instruments) to a single PC and to run them simultaneously. The EC-Link software only needs to be installed once.

For the installation of an additional device, just copy the settings file from the provided installation media of the new instrument into the directory C:\ProgramData\EC-Link. Note that the Windows operating system may hide the directory C:\ProgramData\ by default.

9 Upgrading EC-Link

When upgrading the EC-Link software from version 2.0 or higher, we recommend the following procedure.

- Download and unzip the newest software from https://el-cell.com/support/software
- Run setup.exe and overwrite the existing directory C:\Program Files\EC-Link

When upgrading the EC-Link software from a version below 2.0, we recommend the following procedure.

- Download and unzip the newest software from https://el-cell.com/support/software
- Run setup.exe
- Launch (double-click) EC-Link, and choose the appropriate setting file from the provided list. This settings file will be copied to the directory C:\ProgramData\EC-Link.
- Follow the instructions on the screen. Notice the 8-digit device number 'ADX.....' as displayed in the status window.

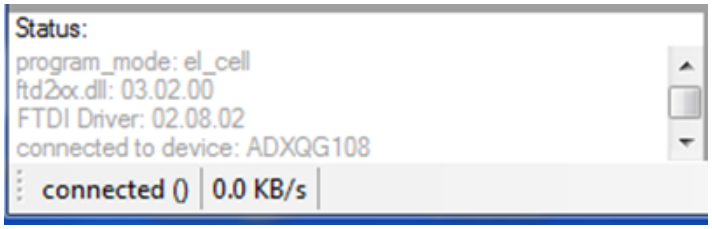

- Quit the software and manually rename the settings file in the directory C:\ProgramData\EC-Link into 'Settings...[ADX.....]. The device number will be used by the software to unambiguously assign the settings file to the corresponding instrument.
- For housekeeping reasons, delete any unused setting files from the directory C:\ProgramData\EC-Link. Also uninstall any older EC-Link program versions.